WORLD WIDE DATA SYSTEMS INC.

TRILOGY - Model III Drive Controller

Installation Manual

WWDSI hereby reserves the right to make changes to any material or any products described herein to improve reliability, functionality, or design. Although the material contained within this manual has been carefully checked, World Wide Data Systems Inc. or any subsidiary thereof, does not assume any liability arising out of the applications or use of any product or circuit described herein.

Copyright World Wide Data Systems Inc. 1983

WARRANTY

World Wide Data Systems Inc. warrants to consumer purchasers and users of this product, that it will be free of manufacturing defects for a period of one year following the date of purchase. This warranty doe not include damage to the product resulting from accident or misuse and will be effective only if the purchaser completes and returns, within thirty days of purchase, the enclosed warranty card. Even if the warranty card is not returned, the limitation of liability and disclaimer of any implied warranties by World Wide Data Systems Inc. are still in effect.

If the product should become defective within the warranty period, we will elect to repair or replace it, provided it is delivered at the consumer's expense to a authorized World Wide Data Systems Inc. repair facility.

THERE ARE NO OTHER WARRANTIES, EXPRESSED OR IMPLIED, INCLUDING, BUT NOT LIMITED TO, THE IMPLIED WARRANTIES OF MERCHANTABILITY AND FITNESS FOR A PATICULAR PURPOSE, THAT APPLY TO THIS PRODUCT FOLLOWING THE ONE YEAR WARRANTY PERIOD OF THE EXPRESS WARRANTY PROVIDED BY WORLD WIDE DATA SYSTEMS INC. WORLD WIDE DATA SYSTEMS INC. WILL NOT BE LIABLE FOR ANY SPECIAL, INDIRECT, INCIDENTAL, OR CONSEQUENTIAL DAMAGES.

The law of certain states does not permit limitations or exclusions of implied warranties and consequential damages, so the above limitations, disclaimers or exclusions may not apply to you. This warranty gives you special legal rights, and you may also have other rights which vary from state to state. Any questions regarding this warranty service can be directed to the folowing address.

WORLD WIDE DATA SYSTEMS INC.
17321 EL CAMINO REAL
HOUSTON, TX. 77058

INTRODUCTION

The Trilogy controller was designed around the WD2793 LSI drive controller which represents the latest technology in drive controllers and provides the highest reliability available anywhere. In addition the controller also provides support for single, double and the new quad density 5" floppy disk drives, - single and double density 8" drives, - and internal Winchester drive support.

HARDWARE REQUIREMENTS

The TRILOGY requires only that you have a Radio Shack Model III 16K Level III system. In order to use 8" disk drives in the double density mode, you will have to install an appropriate CPU speed up kit. Your operating system will also have to support the 8" I/O transfer at the required 8" CPU speed. It should also be noted that additional assemblies will be required to support the internal Winchester drive option.

SOFTWARE REQUIREMENTS

The Trilogy requires no special software and is fully compatible with TRSDOS, NEWDOS 80, DOS+ 3.3 and 3.4 and should also be compatible with any of the other disk operating systems on the market that are compatible with any of the aforementioned DOS systems. Due to the new design of the controller, you should have no difficulty (CRC Errors) using double headed forty and eighty track disk drives.

HOW TO USE THIS MANUAL

This manual has been written in a manner to give you the most information possible and to compensate for the many different configurations of the Model III Floppy Disc Controller kits we sell.

The schematics and technical information concerning the Winchester Host Adaptor section of the Trilogy are proprietary and under no circumstances will be released.

CHECKING PARTS

When you receive the Trilogy disk controller kit, immediately check the contents of the package item by item and verify that all parts were received according to the following parts list. If you find any discrepancies, notify Computex immediately so that corrective action can be taken. Computex will not be liable for missing parts if we are not notified within ten days after your kit has arrived.

Examine the packing material before discarding it to make sure that you are not throwing away any parts. Some of the items you will be receiving are quite fragile and very small. It is therefore, good practice to handle all parts with care and per the correct way that each part should be handled.

I.E. Do Not Handle MOS, CMOS, or LSI chips unless you are properly grounded to insure against static discharge.

PARTS LIST FOR TRILOGY CONTROLLER

Included with the Trilogy Controller Board.

( )....( )....1....Trilogy Controller Board
( )....( )....1....Installation / Users Manual

Inlcuded with the Trilogy accessories kit.

( )....( )....1....Switching Power Supply

Drive Cable Package (included in the accessories kit)

( )....( )....1....Disk Drive Data Cable
( )....( )....1....Controller Power Cable
( )....( )....2....Disk Drive Power Cable
( )....( )....1....20 Conductor Flat Poly Cable
( )....( )....1....8 Conductor Flat Poly Cable
( )....( )....1....Two Terminal Ground Cable
( )....( )....1....Three Terminal Ground Cable

Drive Mounting Bracket Kit (included in the accessories kit)

( )....( )....1....Left Hand Mounting Bracket
( )....( )....1....Right Hand Mounting Bracket

Drive Hardware Package (included in the accessories kit)

( )....( )....4....6/32 Fiber Spacers
( )....( )....4....6/32 Nuts
( )....( )....4....8/32 - 3/16 Screws
( )....( )...11....6/32 - 1/4 Screws
( )....( )....4....6/32 - 1/2 Screws

In addition, if you will be installing 8" disk drives you will need the 8" drive cable. For the Trilogy controller board, one end of the cable will require a fifty pin header socket, the other end will generally require a fifty pin edge card connector. The cable should be made on a one to one basis.

If you will be installing internal Winchester drive's, you will need the host adaptor kit, Winchester controller, Winchester drive, and a different power supply.

Prior to performing any physical work on your Model III, I highly recommend reading this entire manual and all supplements enclosed herein. Some of the assemblies and components enclosed in your Model III Drive Controller Kit are easily damaged if improperly handled or installed. **WARRANTY DOES NOT COVER DAMAGE DUE TO IMPROPER HANDLING, USE OR INSTALLATION!!!** So please, take just a little time to read this boring, nondescript manual (a David Lein I'm not), as it may just save you some time and money.

BEFORE BREAKING ANY TANDY INSTALLED FACTORY SEALS
You should verify proper operation of the following items. No work should be attempted if any of the following sections are not working properly!!!!!

a) Verify that the parallel printer port works by listing a small program on your printer.

b) Verify that 'PRINT MEM' returns the correct amount of memory for your system.

c) Verify that the RS232 serial I/F works OK.

d) If you have installed any other modifications they should be checked for proper operation.

e) As a last reminder, BE SURE and always disconnect the 117 VAC plug prior to doing any work on it. Turning the system off is not enough as the switching power supplies still have one hot leg.

TRSDOS, TRS-80 & Model III are registered trademarks of Radio Shack a Tandy Corporation.

1.0 DISASSEMBLY PROCEDURES

1.1 Begin disassembly by removing all cables connected to the bottom and rear of your Model III Computer. Position the Computer on it's rear panel (with the front of the CRT facing up), then proceed to remove the ten screws located around the bottom of the system. Be sure and keep track of where each screw was removed as three different sizes / types of screws are used. It would be wise to label and place the screws in a small container.

1.2 Re-position the Computer upright again, then remove the #6 screw and washer from the top back (rear) panel.

1.3 Lift the top cover (CRT and all) straight up and away from the Computer's base plate. **BE VERY CAREFUL** as the video monitor board is connected by cables to the main C.P.U. board and power supply. Once the top cover has cleared the C.P.U. mounting frame, lay it on it's side to your left with the CRT facing you. Carefully disconnect the ground cable and the edge card connector that's connected to the video monitor board. Set the top case and CRT out of the way where it won't get damaged.

Also be very careful when lifting the cover because the CRT yoke is close to the C.P.U. mounting frame and may get caught on the wires going to the C.P.U.

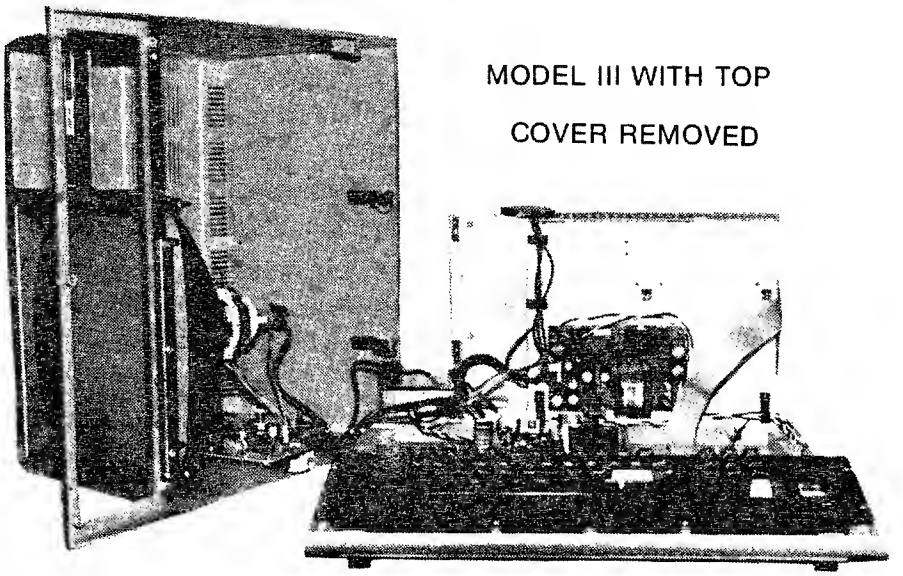

MODEL III WITH TOP COVER REMOVED

2.0 C.P.U. BOARD REMOVAL

2.1 Turn the base of the Computer around so that the back of the C.P.U. board is facing you, the keyboard should be facing away from you. If your system has the EMI/RFI shield installed over the C.P.U., it will have to be removed. If you remove this shield, be sure and reinstall it after you have completed installation of the Trilogy controller kit.

2.2 Remove the following cables that are connected to the C.P.U. board mounted to the back frame:

a) Power Supply Connectors
b) RS232 Cable
c) Keyboard Cable
d) Cassette Cable
e) Remove the small bracket located near the RS232 connector. The bracket is held in by two screws and may have a ground strap attached to it.
f) Remove the screws holding the C.P.U. board to it's frame.

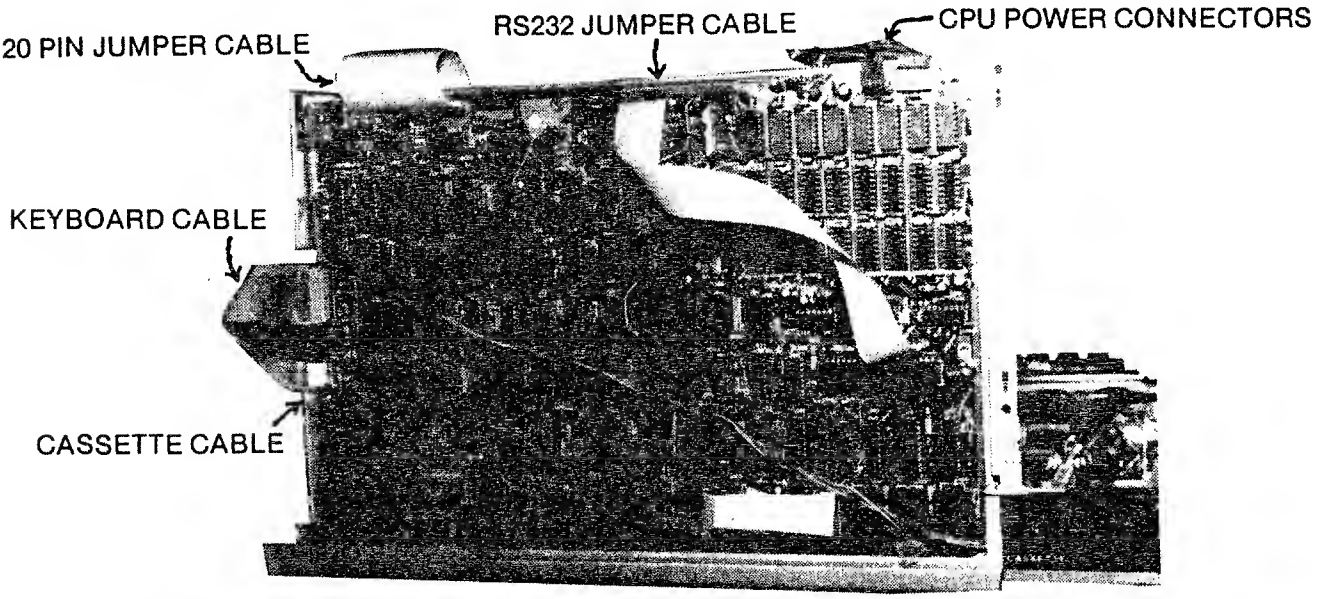

2.5 Remove the C.P.U. Board by pressing the small tabs on the plastic spacer mounts through the mounting holes in the printed circuit board while gently pulling the C.P.U. board off. All of the newer Model III systems use mounting screws throughout the system instead of the plastic spacers.

NOTE
When removing the C.P.U. board, look on the solder side of the board and see if there are any flat plastic insulators where the 6-32 screws were used to mount the board. These insulators are used to keep the C.P.U. from being grounded out when the mounting screws are installed. **MAKE SURE that all of the insulators stay on when reinstalling your C.P.U.**

3.0 DRIVE CONTROLLER BOARD INSTALLATION

3.1 Remove the drive controller board from it's protective packaging. **NOTE** - The integrated circuits used on the drive controller board are static sensitive. Be very cautious and handle the board only by it's edges.

3.2 Carefully insert the 20 pin jumper cable into socket provided on the drive controller. Be extremely careful as the cable is very tempermental and does not give you many chances to reinsert it. The M3DC1 controller board may already have the twenty pin jumper cable installed, if so, skip this step. If you will be using 8" disk drives, you should route the 8" drive cable up through the base of the computer and into the approximate location where it will plug into the Trilogy. You should then position the Trilogy into it's location on the metal chassis. The 8" cable should then be plugged into the J-1 position on the Trilogy controller.

M3CB1 Mounting Spacers

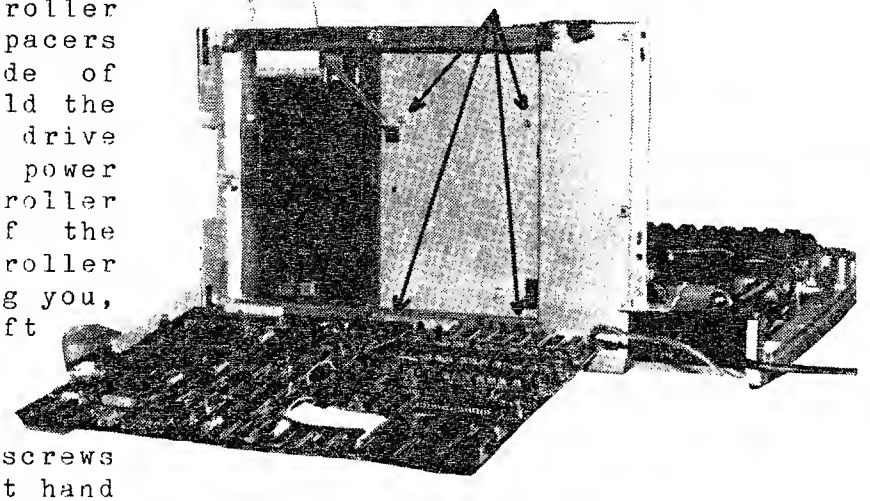

3.3 Place the disk controller board up against the spacers mounted on the left hand side of the frame that is used to hold the CPU board. Position the drive controller so that the 4 pin power connector on the drive controller points towards the top of the system. With the drive controller P.C.B. component side facing you, insert a screw in the top left and right hand side of the board, then screw them down tight. In a similar manner insert two screws in the lower left and right hand sides of the controller P.C.B.

NOTE

Some of the earlier Model III's used plastic standoffs to mount the drive controller PCB. If your system is like this then use two 1/4" spacers and 6-32 * 1/4 screws to mount the top of the PCB to the C.P.U. frame.

3.4 Install the 34 pin two drive cable to the drive controller card's top edge card connector. It doesn't matter which connector on the drive cable is used. When connected properly, the ribbon cable will loop over the top of the Model III chassis, thus positioning the drive connectors so that they will plug right into the drives when they are mounted.

4.0 Drive Bracket Mounting/Assembly Instructions

4.1 Install the left and right hand drive mounting brackets to the base plate using the four screws provided (8-32 x * 3/16). The right hand bracket is the shorter of the two brackets included with your kit and should be mounted on the right hand side of the system when you're facing it.

4.2 The Astec switching power supply will be mounted to the left hand bracket using four 6-32 X 1/2 screws. Insert the four 6-32 X 1/2 screws through the left hand bracket, (the heads of the screws will be on the inside of the bracket). Place the four fiber spacers over each of the 6-32 screws on the outside of the bracket.

4.3 Place the switching power supply up against the left hand bracket so that the three power plugs are pointing towards the top of the bracket. The 6-32 screws should go through the four holes in the switcher. Secure the power supply by threading four nuts over the 6-32 screws.

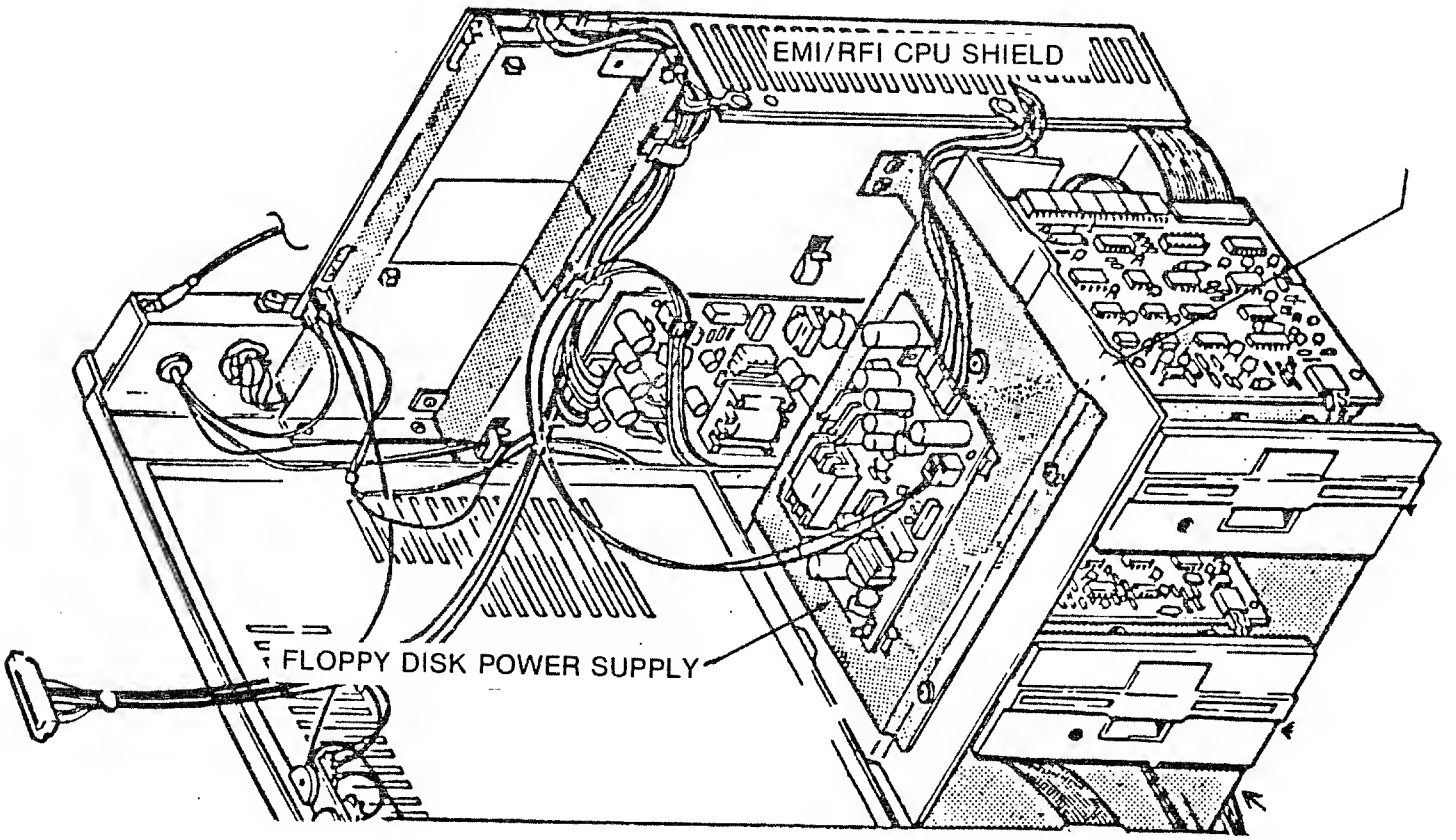

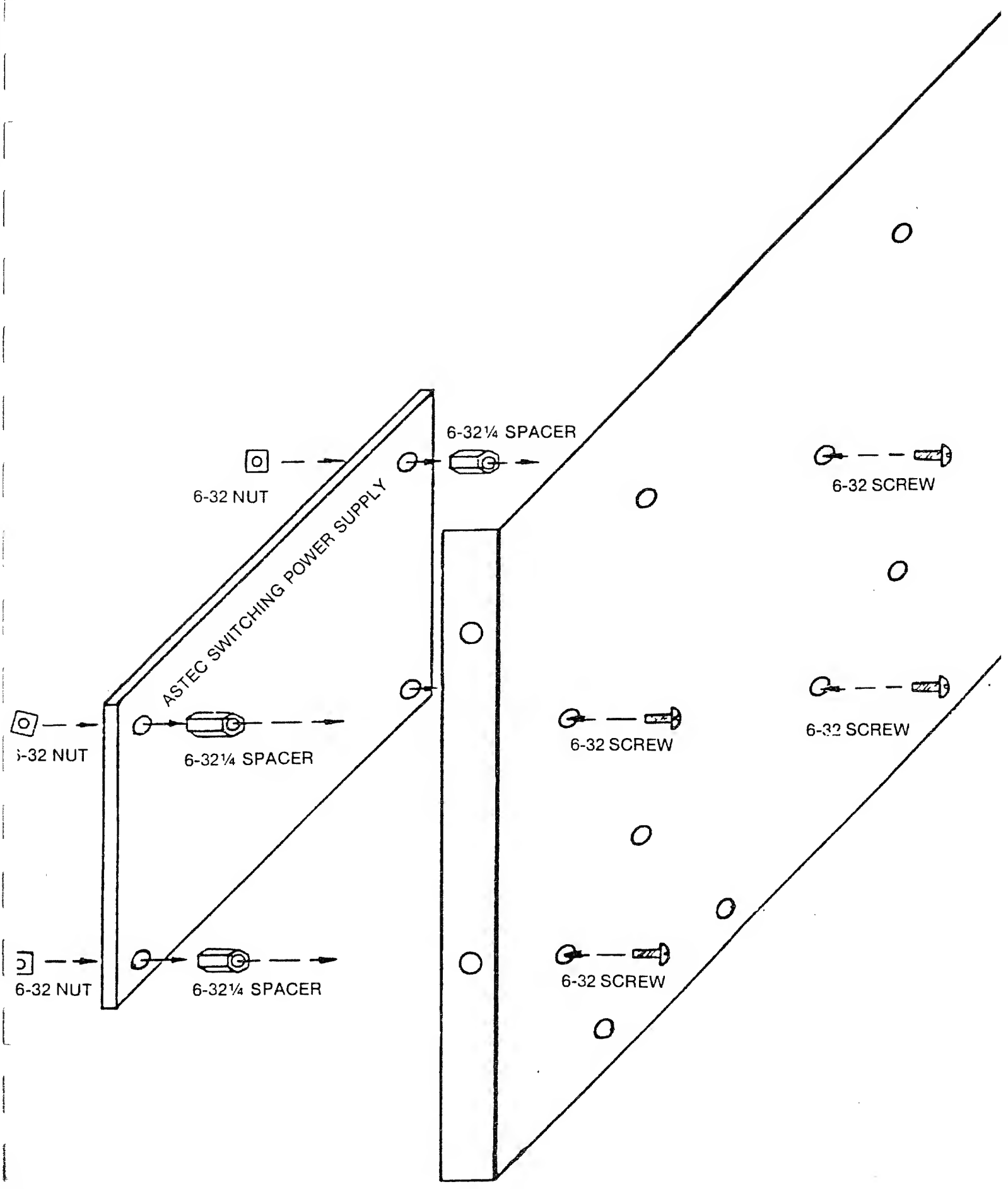
6-32¼ SPACER
6-32 NUT
6-32 SCREW
ASTEC SWITCHING POWER SUPPLY
6-32 NUT
6-32¼ SPACER
6-32 SCREW
6-32 SCREW
6-32 NUT
6-32¼ SPACER
6-32 SCREW

4.4 Make the following connections to the power supply:

a) Connect the 117 vac plug to the two prong connector on the power supply, the 117 VAC plug is located on the inside of your Model III. This plug has one black and one white wire.

b) Connect the three amp miniature connectors to the three connectors on the power supply. With the switcher facing you and the power cable to your right, the power cables for the controller and drives should be plugged in so that there is NO wire going to the fourth pin on the left hand side of each connector. The connectors on the switcher will have the forth pin cut and the mating connectors on the power cables will have their forth location plugged so that the cables cannot be plugged in wrong.

c) Install the ground wire (already located on the base of your Computer), to the power supply. If you experience CRC problems, you should install additional ground wires to the disk drives. Most systems do not require the additional ground cables.

d) Route the two power connectors that go to the disk drives around and behind the left hand drive mounting bracket.

e) Install the 3 terminal ground wire by pushing the ground lug onto each of the disk drive ground lugs. Attach the remaining end to top of the C.P.U. chassis ground strap located by the RS232 connector.

f) Due to the design of the Trilogy drive controller a termination resistor will have to be installed in the disk drive that is installed inside the Model III. The drive farthest from the drive controller should be the drive that has the termination resistor installed.

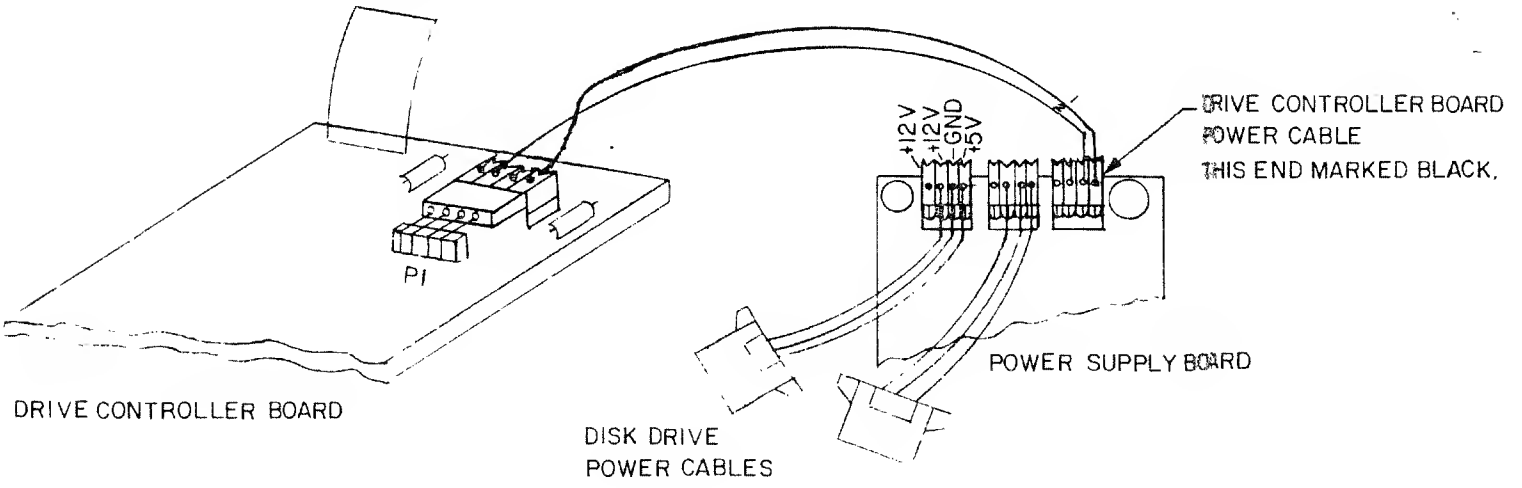

5.0 CONFIGURING TANDON DISK DRIVES for the MODEL III

5.1 Single sided (TM100-1, -3) configuration.

The dip shunt should be programmed as follows: (applies only to Tandon Disk Drives):

1.0 Remove the disk drive from it's packaging.

2.0 Lay the drive on a flat surface with the printed circuit board up and the door of the drive to your left.

3.0 Reference figure 12 and locate the dip shunt.

4.0 Using figure 12, verify that the silver strips are configured as follows;

STRIP	STATUS	LABEL	PIN #	DESCRIPTION
Strip #1	Closed / Shorted	H.M.	8 - 9	Head loads Motor On
Strip #2	Open / Cut	N/C	7 - 10	Spare No Connection
Strip #3	Open / Cut	MUX	6 - 11	Multiplex
Strip #4	Open / Cut	DS3	5 - 12	Drive # 3 Select Line
Strip #5	Shorted for Drive	DS2 # 2	4 - 13	Drive # 2 Select Line
Strip #6	Shorted for Drive	DS1 # 1	3 - 14	Drive # 1 Select Line
Strip #7	Shorted for Drive	DS0 # 0	2 - 15	Drive # 0 Select Line

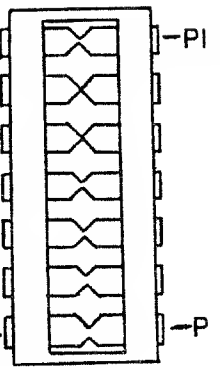

NOTE - There should be two empty holes at the bottom of the socket that the dip shunt is plugged into.

Program the dip shunt in each Model III disk drive as shown above. For example if you are installing your first disk drive, (Drive 0), then strips 1 and 7 should be shorted, all of the rest should be open. If you're installing your second disk drive (Drive #1) then strips 1 and 6 should be shorted with the rest being open. If the dip shunt isn't set as above then simply cut open the silver metal strips that are supposed to be cut using an exacto knife.

5.2 CONFIGURING A DOUBLE HEADED MINIDISK TM100-2, -4

Double headed disk drives can be accessed in two different manners, either as a single volume drive where the disk operating system takes care of accessing the second head as an extension of the first head or as two distinct independent disk drives whereas one head would be accessed as one drive number and the second head would be accessed as another drive number. There are advantages and disadvantages to each method. You should review your DOS manual to help you make the decision.

The procedures for configuring a double headed drive are identical to those used to configure a single sided drive except that three extra jumpers are required. The primary side of the drive (the side that corresponds to a regular single sided drive) is set up by configuring the dip shunt for the drive number you want it to be per paragraph 5.1 steps 1 through 4.

To configure a drive as drive 0
Verify that strips number 1 and 7
are shorted. All others should be open.

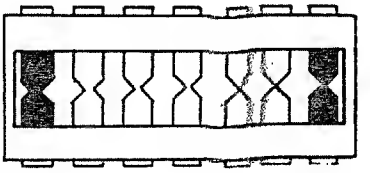

To configure a drive as drive 1
Verify that strips number 1 and 6
are shorted. All others should be open.

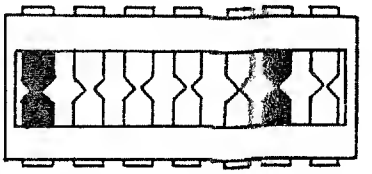

To configure a drive as drive 2
Verify that strips number 1 and 5
are shorted. All others should be open.

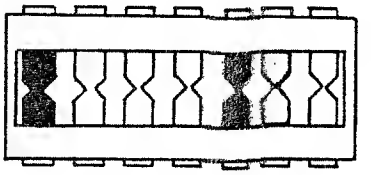

CONFIGURING THE SECOND HEAD OF A DOUBLE HEADED DRIVE

The second head of a double headed drive can be set up as either a single volume double headed drive where the software accesses the second head, or as two distinct drives such as drives 1 and 2. To configure the second head of the drive as another drive such as 2, use the following procedure:

(a) Jumper from I.C. 3E (7407) pin 9 to I.C. 2B (7406) pin 12 using a small piece of wire wrap wire. Solder directly to the pins on the I.C. but be careful not to use too much heat.

(b) Jumper from I.C. 2B (7406) pin 13 to I.C. 2E (74LS14) pin 8.

Then to select the second head as drive 1

Jumper from J1 pin 32 to J1 pin 12. Cut the trace between the edge card finger at pin 32 to the little pad it is attached (top side of the printed circuit board).

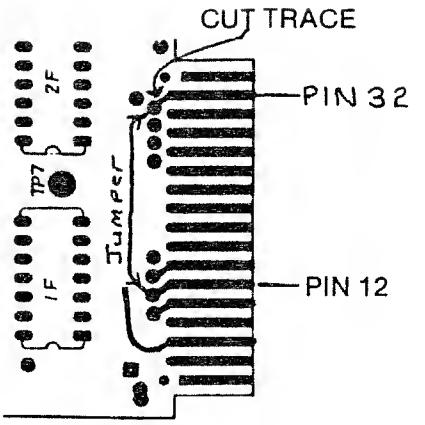

To select the second head as drive 2

Jumper from J1 pin 32 to J1 pin 14. Cut the trace between the edge card finger at pin 32 to the pad it's connected to.

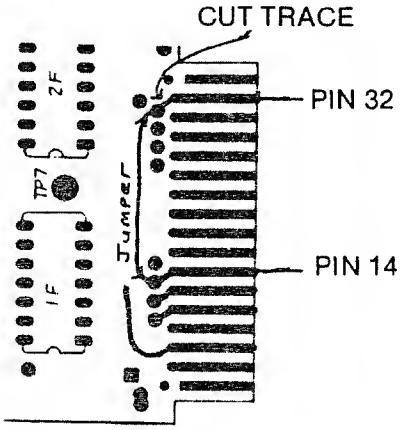

To select the second head as drive 3

Jumper from J1 pin 6 to J1 pin 32. Cut the trace from the finger at J1 pin 32 to the pad it is attached to.

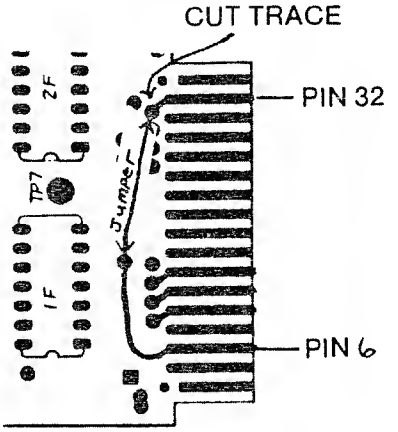

ONE FINAL NOTE

If you have the dip shunt set-up as the same drive number that the jumper on J1 is set up to be then the drive's LED will stay on continuously and the drive will not work properly. Damage can occur to the drive if any of the preceding steps are not followed explicitly!!!!!

5.3 CONFIGURING A DOUBLE HEADED DRIVE AS A SINGLE VOLUME

To configure the double headed drive as a single volume drive, simply configure the dip shunt for the primary side of the head (as drive 0, 1, 2 or 3) then do not add any other jumpers or cut any other traces. Your DOS will take care of handling the side select (J1 pin 32) line.

After you have verified or changed the configuration of your drive, remount the drive and reconnect the drive's power supply and data connector.

6.0 MODEL III DISK DRIVE INSTALLATION

After you have configured each disk drive to be installed in your Model III, you will be ready to install the drives. The first disk drive (Drive 0) should be mounted in the bottom position of your Model III using 6-32 X 1/4 machine screws. The second disk drive (Drive 1) should be installed above the first disk drive.

Perform the following steps for each disk drive to be installed inside the Model III.

a) Connect the disk power connector to the disk drive.

b) Connect the 34 pin edge card connector from the disk drive cable to the J1 data connector on the disk drive.

c) Connect the white ground wire terminal to the ground lug located on the back of the disk drive.

d) Slide the disk drive into the mounting brackets.

e) Slide the drive back until you can insert a 6-32 * 1/4 screw into the left and right front mounting holes in the disk drive. Repeat this step for the right rear screws.

Repeat steps a) through e) for the second disk drive. Install all four screws in the top drive.

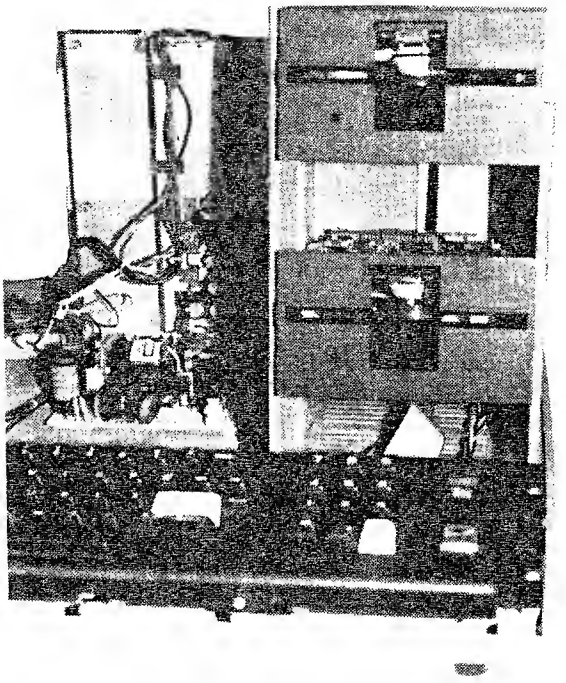

REMOVING THE FRONT PANEL COVERS

The final step in installing your Model III disk drives is to cut out the front panel face plates molded into the Model III case. Using a heavy pair of wire cutters, cut each of the plastic tabs that hold the fake panel in place. Then use a heavy screwdriver and pry out the panel. Believe it or not folks, this is the way the Radio Shack Centers do it. Not only that, but they were issued their very own front panel knocker outer (a 12 inch 3 pound screwdriver) when they received their Model III disk drive installation tool kits.

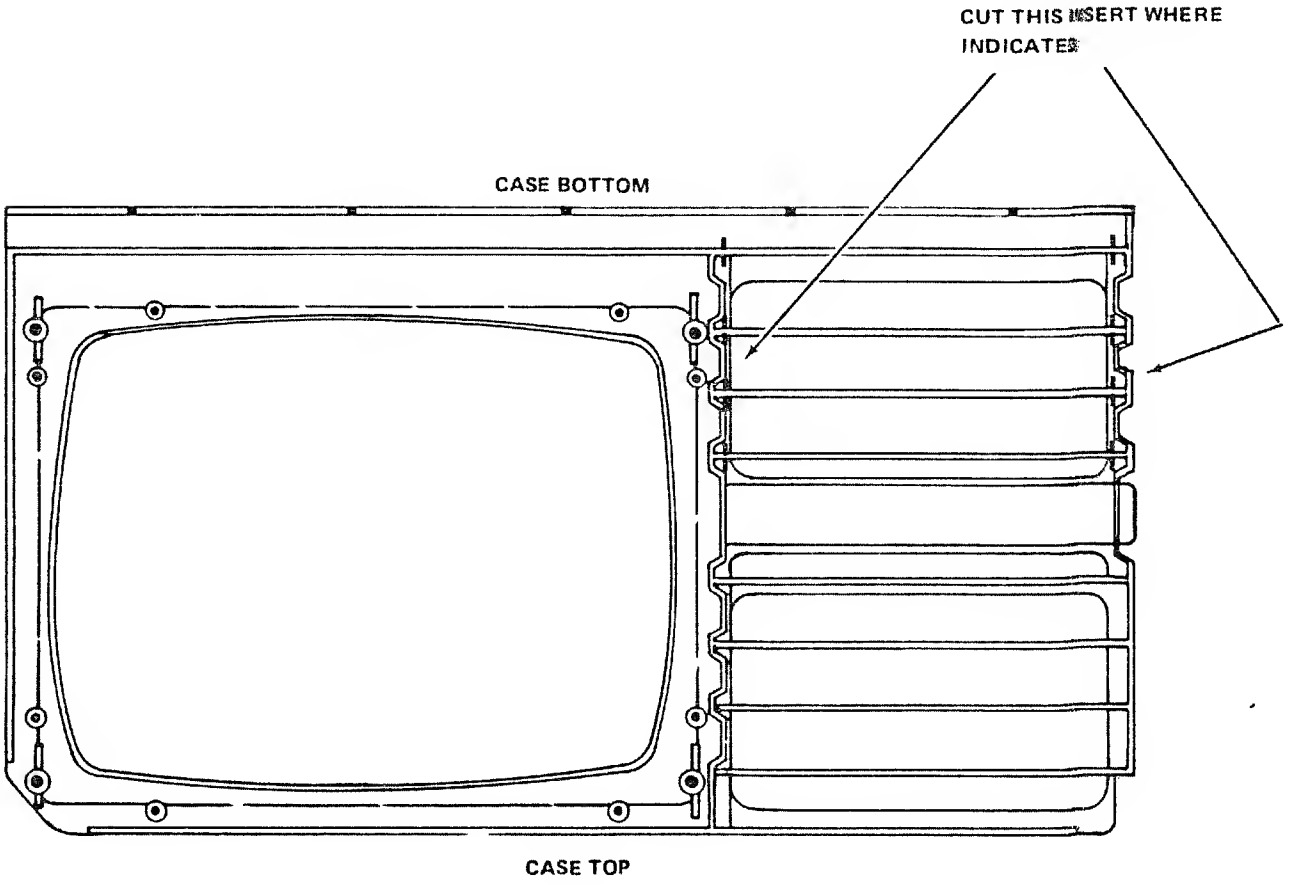

7.0 USING THE TRILOGY CONTROLLER WITH 8" OR QUAD DENSITY DRIVES

7.1 The Trilogy controller board will support 5" disk drives in single or double density automatically. The use of quad density disk drives require that you set up the dip switch DS1 to define which drives are quad density or 8". Switch positions 1,2,3 and 4 represent drive's 4,3,2 and 1 respectively and should be closed (ON) for the drive's that are either 8" or quad density. Position 5 on DS1 should be closed (ON) if you are using only 8" drives (none are quad density).

The eight position dip switch does not increase the number of disk drives that you can attach to your Model III, but essentially allows you to predefine for the controller which drives are eight inch and/or quad density. For example, if drive 0 is a Tandon TM100-1 single sided 40 track drive, drive 1 is a TM101-4 quad density drive, and drive 2 is a eight inch drive, then the controller will have dip switch positions 3 and 4 closed.

7.2 The major differences between 8" and 5" drives is in the clock and data rate. The Trilogy controller board is set up to allow easy interfacing to an external 8" disk drive. The drive is simply plugged into the J-1 connector on the Trilogy, and the appropriate position on the dip switch is set. It is beyond the scope of this manual to include a complete guide for interfacing 8" drives to your Model III, however, enough information is included within this section to allow most industry standard drives to be used. The user should determine which drive number the 8" drive is going to be, then should set the appropriate position on DS1 and on the drive itself. The operating systems should then be configured to support the 8" drive. If you will be using the 8" drive in a double density mode, you will have to install a speed up kit in your Model III CPU board. Make sure that the speed up board and DOS system your using will keep the CPU in the double speed mode during 8" drive I/O.

The Trilogy controller provides a motor off signal on J1 pins 4,6,8, and 24. It also provides for the READY signal coming back from the 8" disk drive. Most 8" drives have various 'strapable' features. Experiment with the controller and the drive to find the best combination.

8.0 MODEL III REASSEMBLY

8.1 Remount the CPU board by placing it back in it's proper position against the back frame. Install all of the mounting screws but be sure that all of the insulating washers are still intact.

8.2 Reconnect the following cables. Be sure to connect the cables exactly as you disconnected them:

a) Reconnect the power supply cables
b) Reconnect the cassette cable
c) Reconnect the keyboard cable
d) Reconnect any ground wires you may have disconnected.
e) Reinstall the bracket removed in step 3.2
f) Plug in the 20 pin connector from the FDC CARD to the CPU Board.
g) Plug in the RS232 connector

8.3 The eight pin jumper cable should be installed on the Model III CPU board by simply plugging it into the connectors JP1A (located by the Z80 I.C.) and JP1B (located by the RS232 connector).

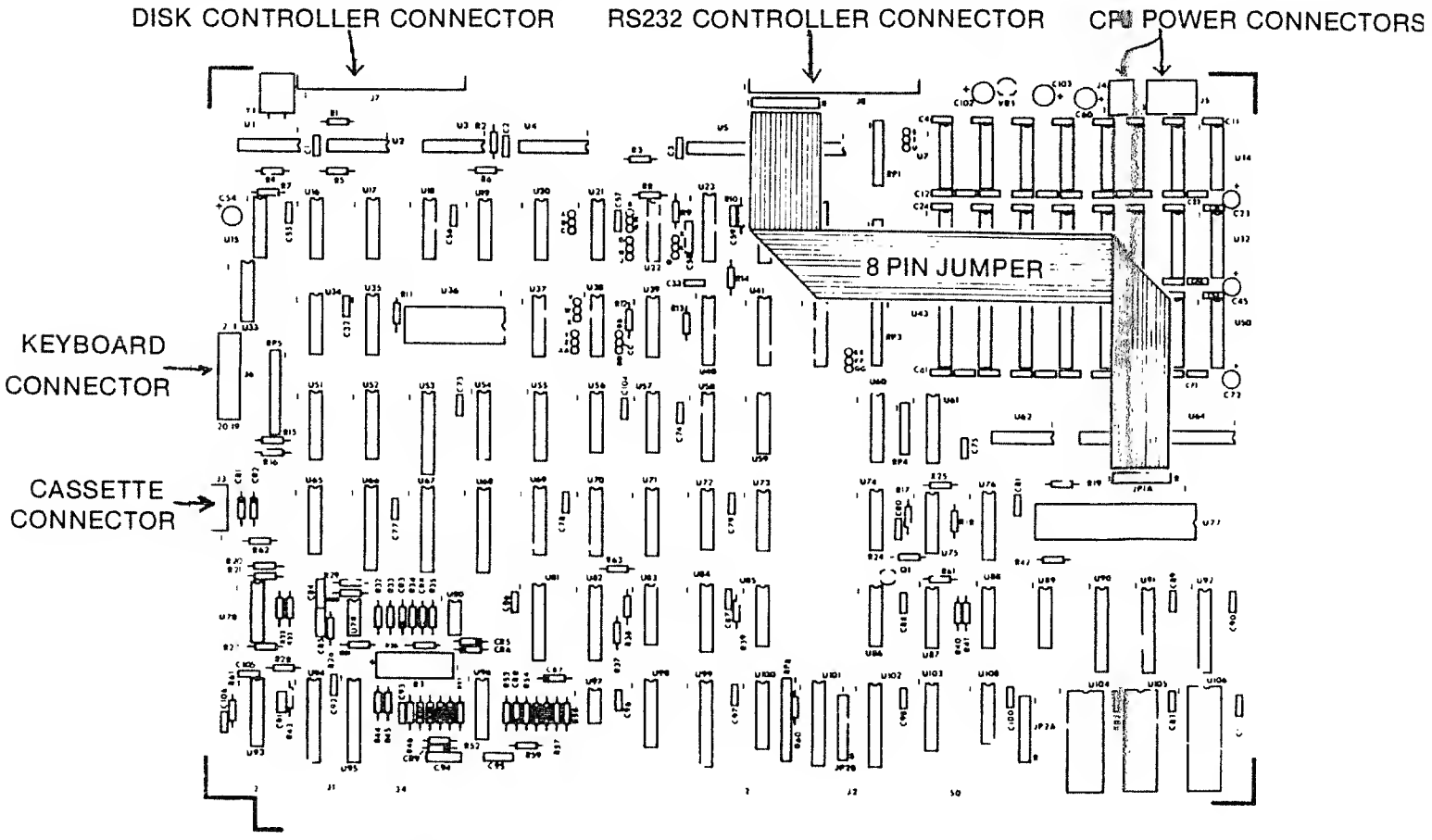

This completes all of the necessary steps to install the disk controller board. You should connect the video monitor back up and try your system before you finish assembly.

9.0 PRELIMINARY CHECKOUT OF THE DISK INSTALLATION

IF YOUR SYSTEM DOESN'T PERFORM ACCORDING TO ANY OF THE FOLLOWING SECTIONS THEN IMMEDIATELY TURN THE SYSTEM OFF AND PROCEED TO THE TEST/TROUBLESHOOTING SECTION. FAILURE TO DO SO MAY RESULT IN SEVERE DAMAGE TO YOUR SYSTEM!!!!!

Without inserting any diskettes into your disk drive, plug in your Model III then turn the power switch on. The Drive 0 front panel LED should light up and the drive's motor should spin for approximately 2 or 3 seconds. During this time the screen may display 'Diskette'. Insert into drive 0 a copy of TRSDOS then depress the orange reset button. The drive should light, motor spin and after what seems to be an eternity the system should boot up and display the TRSDOS prompt.

You should then verify that the system will copy properly to and from each of the disk drives in your system. If all of the proceding tests are successful, you should be ready to finish reassembly of your system as follows.

Carefully reinstall the Model III cover as the yoke on the back of the CRT has a tendency to hang on the wires going to the C.P.U. and is also easy to bump into the C.P.U. mounting frame. Verify that the cover is completely seated to the base then reinstall all of the screws in the same pattern that you removed them.

10.0 CONFIGURATION OF MODEL III EXTERNAL DISK DRIVES

The TM100 series of disk drives will work equally well as external drives on the Model III provided they are configured properly. The Trilogy controller does require the farthest drive from the system to have a termination resistor installed. The Radio Shack drive controller utilizes logic circuitry that determines whether you are selecting internal or external drives for use. The external drives, when connected to a Radio Shack controller, are accessed as drives 2 and 3; however, the drives themselves are actually configured via the dip shunt as drives 0 and 1. For example, when you do a directory on drive 3, the Radio Shack controller will set the internal/external select latch to external, then will place a low on the external drive connector pin 12 which is the drive 1 select line. Radio Shack elected to use this method in order to use their existing drives and cables. This particular scheme is inconsistent with the industry and is only used by Radio Shack in their Model III drive controller board.

The Trilogy controller will access the external disk drives as drives 2 and 3, provided the drive's dip shunt is set as drive 2 or 3.

11.0 INSTALLING ADDITIONAL RAM IN YOUR MODEL III

A total of 48K of RAM can be installed in your Model III by simply plugging the RAM chips in. Ref. fig. 8.0, locate the three banks of 16K RAM chips located on the upper right hand corner of the C.P.U. board. Each 16K set of RAM is added by simply plugging eight 4116 (or equivalent) chips into each succeeding row of sockets on the C.P.U.. The 16K RAM chips must be handled carefully as they are static sensitive. Hold each RAM chip by the plastic edge of the chip and do not touch any legs of the I.C. You may have to bend the legs in on each I.C. to facilitate installation. To do this, simply lay one row of legs on a flat surface then gently apply pressure on the I.C. to push the legs closer together. This should allow the RAM chip to plug into the socket easier. One additional comment - you should try to keep yourself grounded at all times when working with static sensitive devices.

For Model III systems that already have at least 16K of RAM installed, it is not necessary to move any jumpers. However, if you're starting with a 4K RAM system you will have to remove the 4K of RAM, install the 16K RAM chips, then change the following jumpers,

System Storage ----	4K RAM		16K RAM
Change Jumper from	U-T	to	S-T
Change Jumper from	N-P	to	R-P
Change Jumper from	GG-FF	to	EE-FF

12.0 RETURNING A KIT FOR REPAIR

You have done everything you know how to do. You've read and reread the TRSDOS manual, operator manual and you still can't get the ('&%&'%$ thing to work, don't despair. Call us and let us help before you throw the thing out your window. There are, however, a few things you can do to help us when you either have a problem or are returning the kit for repair.

a) Write or call first. Have all information ready before you call.

b) If you are returning the unit, be sure and call prior to returning the unit and get a Return Authorization Number. The RAN is used inhouse to help us track your order. **RETURNS WITHOUT THE RAN WRITTEN ON THE OUTSIDE OF THE BOX WILL NOT BE ACCEPTED!!!**

c) Out of warranty repairs will be billed at the rate of $45.00 per hour not including parts and shipping. DO NOT enclose payment. The kit will be shipped back to you COD for the repair charge and shipping costs.

d) If your kit is in warranty, it must be shipped to us pre-paid. We will pay return shipping. If, after our inspection, we find that the kit was not defective or that the equipment that it was connected to caused the kit to malfunction, then you will be billed at the regular repair rate.

e) Please read and fill out your Warranty Registration Card within thirty (30) days. All warranties are void and null if the registration/warranty card is not filled out and returned to World Wide Data Systems Inc. within the prescribed period.

f) If you are not able to get the kit to operate properly with your Model III then you can return your entire system and kit. We will then install the kit and make the entire system operational. However, our liability only extends to the point of replacing or repairing the disk drive kit. If any repairs are necessary on your Model III, we will at our option (and only after seeing your Model III), repair it as required. The installation of any Model III drive kit will be provided at the prevailing or regular hourly rate.

13.0 Technical Description

The Trilogy floppy disk controller is installed in the Model III to control up to 4 standard 5-1/4 or 8 inch floppy disk drives plus has the added capability of adding an internal Winchester drive. The controller is completely compatible with all known disk operating systems for the Model III including LDOS, DOS+ NEWDOS and TRSDOS.

FEATURES

Provides internal and external drive expansion for up to four drives.

The floppy disk controller features gold plated edge card connections for high reliability on all of the card edges.

Utilizes on chip Phase Lock Loop data seperator for improved reliability.

Write pre-compensation circuitry is provided within the controller chip to eliminate component tolerance problems and increase reliability.

Single double and quad density operation's are supported and may be selected under software / hardware control. With the proper software either single or double density disks may be created and used with equal ease. Quad density is controlled exclusively through hardware.

Write precomp logic is utilized to increase the reliability of disk operations when operating in double density (which is the normal mode of Model III operation).

The floppy disk controller supports the use of the Non-Maskable Interrupts (NMI) generation logic to signal the C.P.U. of the interrupt requests from the Floppy Disk Controller (FDC) chip (FD 1793-01) and the occurrence of the disk motor timeout. This interrupt is used to signal the operating system software of the end of an operation or an error condition.

MODEL III CPU to DISK CONTROLLER INTERFACE

Port interfaces between the C.P.U. and the floppy disk controller board are as follows:

* Port 244 (F4H) - Drive select port which operates as follows;

DATA BIT	FUNCTION
D0	Selects drive 0 when set
D1	Selects drive 1 when set
D2	Selects drive 2 when set
D3	Selects drive 3 when set
D4	Selects side 0 when reset Selects side 1 when set
D5	Write precomp engages when set Write precomp disabled when reset
D6	Generate waits with drive select if set No waits generated if reset
D7	Select double density if set Select single density if reset

* Port 240 (FOH) - FDC Command/Status Register
  Contains command and status information

* Port 241 (F1H) - FDC Track Register
  Contains current track number

* Port 242 (F2H) - FDC Sector Register
  Contains desired sector number

* Port 243 (F3H) - FDC Data Register
  Contains data during data transfers

* Port 244 (E4H) - NMI Mask/Status Register
  Operates as follows;

DATA BIT Function (When Writing to NMI mask register)

D6 ... Allow FDC DRQ to generate NMI when set
Inhibit FDC DRQ generated NMI when reset
D7... Allow FDC INTRQ to generate NMI when set
Inhibit FDC INTRQ generated NMI when reset
Function (When reading from NMI register)
D5 ... Keyboard Reset button status; 1=False, 0=True
D6 ... FDC DRQ status; 1=False, 0=True
D7 ... FDC INTRQ status; 1=False, 0=True

FLOPPY DISK CONTROLLER CHIP

The heart of the Computex disk controller is the WD2793B-01 MOS LSI floppy disk controller chip. This chip provides numerous features such as the following;

- o Soft sector format compatibility
- o Automatic track seek with verification
- o Accommodates single and double density formats
- o Double buffering of data 8-bit bi-directional bus for data, control and status
- o On-chip track and sector registers
- o Comprehensive status information
- o Incorporates encoding/decoding & address mark circuitry
- o Provides On Chip Phase Lock Loop Data Seperation
- o Provides On Chip Write Precompensation

The following is a description of the pinout of the WD 2793B-01.

1 - ENABLE PRECOMP
2 - WRITE ENABLE*
3 - CHIP SELECT*
4 - READ ENABLE*
5 - A0 ADDRESS LINE
6 - A1 ADDRESS LINE
7 - D0 DATA LINE
8 - D1 DATA LINE
9 - D2 DATA LINE
10- D3 DATA LINE
11- D4 DATA LINE
12- D5 DATA LINE
13- D6 DATA LINE
14- D7 DATA LINE
15- STEP
16- DIRECTION
17- Not 5 / 8 SELECT
18- READ PULSE WIDTH
19- MASTER RESET*
20- GROUND
21 - +5 VOLTS
22 - TEST*
23 - PUMP CIRCUIT
24 - CLOCK
25 - ENABLE MINI FLOPPY
26 - VCO
27 - RAW READ*
28 - HEAD LOAD
29 - TRACK GREATER THAN 43
30 - WRITE GATE
31 - WRITE DATA
32 - READY
33 - WRITE PULSE WIDTH
34 - TRACK 00*
35 - INDEX PULSE*
36 - WRITE PROTECT*
37 - DOUBLE DENSITY*
38 - DATA REQUEST
39 - INTERRUPT REQUEST
40 - HEAD LOAD TIMING

Commands which may be output to the FDC command/status register through port 240 (FOH) are as follows:

Command Type	Bits 7	6	5	4	3	2	1	0
I Restore	0	0	0	0	h	V	r1	r0
I Seek	0	0	0	1	h	V	r1	r0
I Step	0	0	1	T	h	V	r1	r0
I Step in	0	1	0	T	h	V	r1	r0
I Step out	0	1	1	T	h	V	r1	r0
II Read Sector	1	0	0	m	S	E	C	0
II Write Sector	1	0	1	m	S	E	C	a0
III Read Address	1	1	0	0	0	E	0	0
III Read Track	1	1	1	0	0	E	0	0
III Write Track	1	1	1	1	0	E	0	0
IV Force Interrupt	1	1	0	1	I3	I2	I1	I0

where:

h = 1 = Load head / 0 = Head Not Loaded
V = 1 = Verify on destination track / 0 = No verify
T = 1 = Track Update Flag - Load Head at beginning
T = 0 = No update of the track flag
r1r0 = 00 = 6 ms step rate / 01 = 12 ms step rate
= 10 = 20 ms step rate / 11 = 30 ms step rate
u = 1 = Update track register / 0 = No track register update
m = 1 = Multiple record transfer / 0 = Single record transfer
a0 = 1 = Data address mark = F8 / 0 = Data address mark = FB
E = 1 = 15 ms delay on HLT sample
0 = no delay on HLT sample
S = 1 = Side 1 select / 0 = Side select
C = 1 = Enable / 0 = Disable side select compare
I3 = 1 = Immediate interrupt
I2 = 1 = Interrupt on index pulse
I1 = 1 = Interrupt on ready to not ready transition
I0 = 1 = Interrupt on not ready to ready transition

The status register may be input to the C.P.U. through port 240 (FOH). The meaning of the status bits are summarized below.

Bit	Type 1 Cmds	Read Address	Read Sector	Read Track	Write Sector	Write Track
S7	Not Rdy	Not rdy	Not rdy	Not rdy	Not rdy	Not rdy
S6	Wr prot	0	0	0	Wr prot	Wr prot
S5	Hd loaded	0	rcrd type	0	Wr Fault	Wr fault
S4	Seek err	RNF	RNF	0	RNF	0
S3	CRC err	CRC err	CRC err	0	CRC err	0
S2	Track 0	Lost data	Lost data	Lost data	Lost data	Lost data
S1	Index	DRQ	DRQ	DRQ	DRQ	DRQ
S0	Busy	Busy	Busy	Busy	Busy	Busy

DETAILED CIRCUIT DESCRIPTION

NOTE - In the text below, shorthand notation is used to designate the component number and output pin number. For example, U06-13 refers to the I.C. at location U06 with output pin 13.

CLOCK GENERATION LOGIC

The floppy disk controller master clock is crystal controlled to eliminate adjustments. The combination of the 16 MHz crystal (Y1) and the inverters U6 generate the basic 16 MHz clock which is buffered by inverter U6-08. The 390pF capacitor is used to suppress second, third and fourth harmonics. This clock is counted down by the 4-bit binary counter U7 to generate 8 MHz (U17-12), 4 MHz (U17-09), 2 MHz (U17-08), and 1 MHz (U17-11) clock signals. Only the 2 MHz clock is used as an input to U1 the disk controller. U1 provides internal divide by two circuits on the clock input to allow selection of 5" or 8" drives.

C.P.U. PORT INTERFACES WITH THE FLOPPY DISK CONTROLLER

The floppy disk controller port addresses are decoded on the C.P.U. board and signals are provided to the floppy disc controller as shown in the table below. The function of these signals will be explained in the areas where they are used.

SIGNAL	IN/OUT	PORT#	FUNCTION
DRVSEL	IN	F4H	DRIVE SELECT & CONTROL
DISKIN	OUT	FOH-F3H	FDC INTERFACE
DISKOUT	OUT	FOH-F3H	FDC INTERFACE
RDNMISTATUS	IN	E4H	NMI STATUS REGISTER
RDNMIREG	OUT	E4H	NMI MASK REGISTER

CPU DATA BUS INTERFACE

The C.P.U. data bus signals DOB through D7B are buffered onto the Trilogy bus via an octal transceiver. One gate of U13 combines RDNMI and RE to enable the octal transceiver into the read mode. U3 an tri-state octal buffer, gates the control signals from the CPU onto the Trilogy controller. U3 is always enabled and provides buffering to prevent noise problems. Signals DISKOUT and DISKIN from the C.P.U. port decoding logic are routed to the FDC pins 2 (Write Enable) and pin 4 (Read Enable) and cause the FDC to gate information to or from the data bus. Address lines AO and A1 from the C.P.U. address bus are also routed to the FDC pins 5 and 6 and are used by the FDC to determine which internal FDC register is being addressed.

The CPU data bus signals are also routed to the data bus latch register (U11). The positive going DRVSEL causes the C.P.U. data bus output to be latched into the data bus latch register. This latch register stores the drive select signals, side select, write precomp, and density bits of the CPU output to port 240 (FOH).

READY/MOTOR-ON LOGIC

Signal DRVSEL causes the READY one-shot (U17) to be set. This one-shot is buffered by inverter U09-12 to generate the MOTOR-ON signal which is connected to disk bus pin 16. This signal also provides the READY and HLT signals to the FDC pins 32 and 23 respectively. READY* provides the input to the NMI and the NMI status register logic. Unless retriggered by DRVSEL, the READY one-shot will time out and reset in approximately 3 seconds causing MOTOR-ON to go false.

DRIVE SELECT LOGIC

DRVSEL causes the data on the data bus to be latched in the latch register. Bits 0 through 3 represent the drive select bits from the C.P.U. The latch register bits 0 through 3 are inverted/buffered by U10-02, U10-04, U10-06, and U10-08 to generate drive select signals DS0, DS1, DS2, and DS3. These signals are connected to the disk data bus pins 10, 12 14, and 06 respectively. The drive select signals are also fed into DS1 a eight position dip switch. The dip switch allows the user to select which drives attached to the system are either 8" or quad density. The first four positions correspond to drive select lines 4,3,2, and 1 respectively. When any of the first four positions are set in a closed position, the drive corresponding to the position set will be either a quad density or 8" drive. The dip switch allows the drive select signals to be gated into U15 a four input nand gate. The output of the nand gate is always low unless one or more of the dip switches (1-4) are closed. Anyone of the four positions being closed will set U15 output to a high which in turn will place a high onto U1-25 the enable mini-floppy control. When high, the FDC disables the internal divide by two flip flop on the incoming clock signal.

Switch position number five, forces U1-17 the *5/8 control line to a high all of the time. This means that any drives selected by DS1 positions 1 through 4 will be 8" drives. It is important that DS1 be correctly set in order for the drive controller and attached disk drives to perform correctly. Bit 04 of the latch register is the Side Select bit. This bit is inverted/buffered by U09-06 and U09-08 to generate SIDE SELECT which is connected to the disk bus pin 32.

When the READY one-shot timeout occurs after about 3 seconds, it causes the reset of the drive select bits (and all other bits) in the data bus latch register. This causes the active disk drive to be deselected.

CPU WAIT LOGIC

The WAIT signal to the C.P.U. stops execution of the current instruction. The current instruction will not be completed until the WAIT signal goes false.

The WAIT signal to the C.P.U. is generated by the floppy disc controller board as a result of either of 2 conditions. First, the signals DISKIN* and DISKOUT* will cause the 700 nanosecond one-shot U05-13 to be set. This one-shot causes NAND gate U12-03 to generate WAIT for 700 ns on pin 19 of the bus to the C.P.U.

The second condition to generate WAIT to the C.P.U. is an output to port 244 (F4H) with data bit 6 set. The output to port 244 (F4H)

generates DRVSEL which is anded with D6B to set one-shot U05-05. This one-shot may be reset by one of three conditions: 1) interrupt request by the FDC, 2) data request by the FDC, and 3) by the reset key on the keyboard.

The U05-05 one-shot acts as a watchdog timer in case none of the above 3 conditions occur. The one-shot will timeout in approximately 900 microseconds freeing the C.P.U. for appropriate software processing. This timeout also prevents loss of memory data due to lack of memory refresh.

NON-MASKABLE INTERRUPT LOGIC

The NMI mask register consists of two flip-flops; U04-05 and U04-09. These flip-flops are clocked by the WRNMIMASKREG signal from the C.P.U. which is generated by an output to port 228 (E4H). Data bits D7B and D6B from the C.P.U. control whether these flip-flops are set or reset.

U04-05 stores D7B from the C.P.U. which is the enable/disable for allowing the FDC INTR REG to cause a NMI. The output of flip-flop U04-05 is anded with INTR REQ from the FDC by NAND gate U12-08 generating NMI which is routed to pin 13 of the bus to the C.P.U.

U04-09 stores D6B from the C.P.U. which is the enable/disable for allowing the READY timeout to cause a NMI. The output of flip-flop U04-09 is anded with READY* from the READY one-shot U17-13 by NAND gate U12-11. This generates NMI which is routed also to pin 13 of the bus to the C.P.U.

The signal NMI to the C.P.U. causes an unconditional interrupt of the C.P.U. and a transfer to ROM location 66H. The ROM transfers control to location 4049H of RAM.

The NMI Status Register consists of several signals which are gated into the data bus to the C.P.U. by the signal RDNMISTATUS. INTREQ from the FDC is gated onto the data bus D7B by the tri-state driver U14-05. READY* from one-shot U17-13 is gated onto data bus D6B by the tri-state driver U14-03. RESET* is inverted by U16-03 and then gated onto data bus D5B by the tri-state driver U14-07. A constant low is gated onto data bus D0B by the tri-state driver U14-09.

READ DATA LOGIC

READ DATA from the disc drive is received by the floppy disc controller on pin 30 of the disc drive bus. This signal is pulled up by a 150 ohm resistor the fed into the FDC pin 27.

WRITE DATA LOGIC

The FDC generates signal WRITE GATE* which is routed to pin 24 of the disc drive bus via buffer U09-02 and U09-04. The actual write data generated by the FDC on pin 31 is routed to the internal and external drive buss by U09-06 and U09-08 respectively.

Write precomp control is enabled and disabled by the C.P.U. using bit 5 of port 244 (F4H). If bit 5 is set, write precompt is enabled and if reset, write precomp is disabled. The latched data bit 5 from latch register U11-15 is fed to the FDC pin 1 to control write precomp. Write precomp is usually set by the disk operating system to enable write precomp when the drive is on 50% of the number of tracks

and above. For example, a forty track drive will have the write precomp enabl;ed from tracks twenty through forty.

READ AND WRITE PULSE WIDTH CONTROL

Both read and write pulse widths are controlled by potentiometers or by a pair of resistors that provide a controlling voltage to the FDC internal voltage controlled oscillators.

The read pulse width is controlled by potentiometer R5 (or the two resistors by R5). The resistance is set to provide a specific voltage to the FDC pin 18, which will inturn setup the internal read pulse width circuitry within the FDC.

The write pulse width is controlled by potentiometer R4 (or the two resistors by R4). The resistance is set to provide a specific voltage to the FDC pin 33, which will inturn setup the internal write pulse width circuitry within the FDC.

The read and write pulse widths, and the VCO can be adjusted using the following procedure:

a) With the Trilogy not connected to either the CPU or a disk drive, apply power, then temporarily connect TP6 to a ground. Apply a low going pulse to TP7 (the master reset line) then remove the ground attached to TP6 and apply +5 volts to TP6. This will setup the internal VCO in the FDC and allow the read / write pulse widths and the data seperation VCO to be adjusted.

b) Throughout the following adjustments, verify that DS1 has all positions open. Also verify that U1-25 ENMF is low, U1-17 *5/8 is low, U1-01 ENP is low, and that U1-37 *DDEN is low. The adjustments will not be correct if the preceeding conditions are not met.

c) Adjust the internal VCO by placing your scope lead to TP5. The scope should be setup for internal triggering, 1 volt per division, and 1mS. Adjust C7 for a 3.9mS to 4.2mS reading at TP5. This adjustment is critical and should be done when the board is at operating temperature. If your using a frequency counter instead of a scope, you should adjust the VCO for 125,000 Hz +/- 1 Khz.

d) With your scope probe at TP4, adjust R5 the 50K ohm pot for a read pulse width of .5uS +/- .05uS. Evaluation tests have been performed and found that a RPW of .2uS to .6uS worked equally well on several DOS systems. Since the RPW is not terribly critical, you may find that a voltage dividing network has replaced the pot normally located at R5.

e) With your scope probe at TP3, adjust R4 the 20K ohm pot for a pulse width of .2uS +/- .075uS. Evaluation tests have shown that the WPW works equally well with several DOS systems with the WPW adjusted from .075uS to .3uS. For this reason, you may find that a voltage dividing network composed of two resistors have been used in place of R4.

FLOPPY DISC CONTROLLER TEST PROCEDURES

The following short Basic program may be useful in identifying problems in the disc controller. In the tests below, execute the Basic software under ROM Basic or Disc Basic if the disc controller will load Disc Basic. With the disc controller installed, ROM Basic is entered by holding the break key down when pressing reset.

1. Verify the disc can be selected: Execute each of the following individually from Level III Basic, (hold down the break key and depress reset), and verify that the LED comes on and the motor runs for about 3 seconds for each of the disc drives.

```
10 OUT 244,1:          ' VERIFY DISC DRIVE 0
20 OUT 244,2:          ' VERIFY DISC DRIVE 1
30 OUT 244,4:          ' VERIFY DISC DRIVE 2
40 OUT 244,8:          ' VERIFY DISC DRIVE 3
```

2. Verify that status can be returned from the disc controller. Execute the following and note the number printed. It should be 128 indicating the disc controller is not ready.

```
50 PRINT INP(240):STOP
```

3. Verify that the disc controller status will return proper status. Remove the diskette from the drive number 0 and execute the following. Note the number printed. It should be either 6 or 2 representing that the index sensor is set and that the disc drive is at track 00 or not at track 00. Insert a diskette in disc drive 0 but do not close the door. Repeat the above and note the number printed will be 4 or 0. Be sure the index hole in the disc is not visible. If the diskette is write protected, the above numbers will have 64 added to them.

```
55 OUT 244,1:PRINT INP (240):STOP
```

4. Verify that the NMI register can be read: Execute the following and note the number printed. Under ROM Basic, it should be 62 (3EH) representing bit 0 = 0, bit 6 = 0, and bit 7 = 0, with all other bits = 1. Under Disc Basic it may print 190 indicating the FDC is requesting an interrupt.

Binary		Hex		Dec		Disk Controller
0011 1110	=	3EH	=	62	-	NO INTR, NOT READY
0111 1110	=	7EH	=	126	-	NO INTR, READY
1011 1110	=	BEH	=	190	-	INTR REQ, NOT READY
1111 1110	=	FEH	=	254	-	INTR REQ, READY

```
60 PRINT INP(228):STOP
```

5. Verify that the ready bit status can be properly read in the NMI status register. Execute the following and note the number printed. It should be 126 which is the same as test number 4 above except bit 6 is set representing the READY flip-flop being set. As above, the FDC interrupt request may be set. If so, the number printed will be 254.

```
70 OUT 244,1:PRINT INP(228):STOP
```

6. Verify that the FDC INTERRUPT REQUEST bit can be properly set and reset and that it can be seen in the NMI status registus. Execute the following and note the number printed. It should be 254 representing READY and FDC INTERRUPT REQUEST set along with all other bits except bit 0.

```
80 OUT 244,1:OUT 240,216:PRINT INP(228):STOP
```

Execute the following and note the number printed. It should be 126 indicating the READY bit is set.

```
85 OUT 244,1:OUT 240,208:PRINT INP (228):STOP
```

7. Verify that any desired value can be set into the FDC track register and read back. Execute the following program.

```
90 FOR A-0 TO 255
100 OUT 241,A: B=INP(241): PRINT A;
110 IF A<>B PRINT "ERROR";:STOP
120 NEXT A:STOP
```

8. Verify that the disc will seek a desired track. Verify will not be performed. Execute the following program with a double density diskette in the disc drive. The number printed should be 0 if the disc is not write protected and 64 if it is write protected. Try both cases. Listen for the disc restore to trace 0 and seek track 39.

```
130 OUT 244,1          'SELECT DRIVE 0
140 OUT 240,3          'RESTORE THE DISC
150 FOR X=1 TO 500     'DELAY - DO NOT OMIT
160 OUT 244,1
170 NEXT X
180 OUT 244,1          'SELECT DRIVE 0
190 OUT 241,0          'SET CURRENT TRACK=0
200 OUT 243,39         'SET DESIRED TRACK=39
210 OUT 240,19         'ISSUE SEEK COMMAND
220 FOR X=1 TO 500     'DELAY - DO NOT OMIT
230 OUT 244,1
240 NEXT X
250 PRINT INP(240)     'PRINT FDC STATUS
260 STOP
```

Change line 210 as indicated in line 350 below. This turns verify on. The disc controller is still being set up for single density so a seek error should occur. The number printed should be 16 or 48 indicating the head is loaded.

```
270 OUT 244,1          'SELECT DRIVE 0
280 OUT 240,3          'RESTORE THE DISC
290 FOR X=1 TO 500     'DELAY - DO NOT OMIT
300 OUT 244,1
310 NEXT X
320 OUT 244,1          'SELECT DRIVE 0
330 OUT 241,0          'SET CURRENT TRACK=0
340 OUT 243,39         'SET DESIRED TRACK=39
350 OUT 240,23         'ISSUE SEEK COMMAND
360 FOR X=1 TO 500     'DELAY - DO NOT OMIT
370 OUT 244,1
380 NEXT X
390 PRINT INP(240)     'PRINT FDC STATUS
400 STOP
```

Change the lines 270, 300, 320, and 370 to turn on double density. This is reflected below. The number printed should be 32 indicating a head loaded status. If the disc is write protected, the number will be 96.

```
410 OUT 244,129        'SELECT DRIVE 0
420 OUT 240,3          'RESTORE THE DISC
420 FOR X=1 TO 500     'DELAY - DO NOT OMIT
440 OUT 244,129
450 NEXT X
460 OUT 244,129        'SELECT DRIVE 0
470 OUT 241,0          'SET CURRENT TRACK=0
480 OUT 243,39         'SET DESIRED TRACK=39
490 OUT 240,23         'ISSUE SEEK COMMAND
500 FOR X=1 TO 500     'DELAY - DO NOT OMIT
510 OUT 244,129
520 NEXT X
530 PRINT INP(240)     'PRINT FDC STATUS
540 STOP
```

9. For automatic printout of the status register, a GOSUB to the following subroutine may be substituted in place of the PRINT INP(240) statements in the programs above.

```
1000 DN=INP(240):ST=DN
1010 IFDN-128>=0THENDN=DN-128:D7=1ELSED7=0
1020 IFDN-64>=0THENDN=DN-64:D6=1ELSED6=0
1030 IFDN-32>=0THENDN=DN-32:D5=1ELSED5=0
1040 IFDN-16>=0THENDN=DN-16:D4=1ELSED4=0
1050 IFDN-8>=0THENDN=DN-8:D3=1ELSED3=0
1060 IFDN-4>=0THENDN=DN-4:D2=1ELSED2=0
1070 IFDN-2>=0THENDN=DN-2:D1=1ELSED1=0
1080 IFDN-1>=0THENDN=DN-1:D0=1ELSED0=0
1090 PRINTTAB(29),"D7 D6 D5 D4 D3 D2 D1 D0"
1100 PRINT"FDC STATUS REGISTER = " ;D7 ;D6 ;D5;D4;D3;
     D2;D1;D0;
1110 PRINT" = ";ST
1120 IFD7=1THENPRINT"BIT 7=1, DRIVE NOT READY":RETURN
1130 IFD6=1THENPRINT"BIT 6=1, DISKETTE WRITE PROTECTED"
1140 IFD5=1THENPRINT"BIT 5=1, DISC DRIVE HEAD LOADED"
1150 IFD4=1THENPRINT"BIT 4=1, SEEK ERROR - TRACK
     NOT VERIFIED"
1160 IFD3=1THENPRINT"BIT 3=1, CRC ERROR IN I.D. FIELD"
1170 IFD2=1THENPRINT"BIT 2=1, DISC DRIVE AT TRACK 00"
1180 IFD1=1THENPRINT"BIT 1=1, INDEX MARK DETECTED"
1190 IFD0=1THENPRINT"BIT 0=1, DISC CONTROLLER BUSY"
1200 RETURN
```

14.0 TROUBLESHOOTING the Trilogy - DRIVE CONTROLLER

All of the assemblies in the Model III drive controller kits are fully tested on a Model III prior to shipping. However, during the process of installing your drive controller or even during shipping, the assemblies may be electrically or mechanically damaged. For this reason we have compiled a troubleshooting section that covers both the Trilogy drive controller and the complete M3DKO drive controller kit.

In addition, we have coded each step in the troubleshooting section so that you need perform only that level of troubleshooting for which you feel you are capable. The coding works as follows;

0 Module Replacent Level

Requires digital voltmeter and a general knowledge of how to use a voltmeter to make voltage and continuity measurements.

Component Level Repair on Modules

Requires DVM, Logic Probe, and Oscilloscope (preferable), plus a good working knowledge of digital electronics, how to handle MOS and how to solder.

SYSTEM DISPLAYS 'CASS' WHEN POWER IS APPLIED OR UPON SYSTEM RESET

- 0 Verify that the drive controller has + 5VDC on the left hand pin (#1) on P-1.

- 0 Verify that all power cables are plugged in correctly. Specifically check the power cable that goes from the power supply to the drive controller.

- 0 If no voltages can be measured at the drive controller you should unplug one by one each of the devices that are connected to the switching power supply. Then, measure the voltage directly on the power supply. If no voltage can be measured at the drive controller, verify that 117 VAC is applied to the two pin power connector on the switching supply. If 117 VAC exists, the power supply is probably defective. The supply should be returned for replacement. NOTE: Be very careful when measuring any voltages coming from the switching power supply as an inadvertent short across any of the supply outputs will blow the supplies Fuse Resistor.

- o Using a digital voltmeter, verify the continuity of the twenty pin jumper from the drive controller to the C.P.U. and the eight pin jumper between JP1 JP1B. If either jumper appears to be defective, return the defective cable for replacement.

- # Reference the troubleshooting flow chart at the end of this section for details on component level troubleshooting.

DRIVE 0 LED AND MOTOR DO NOT TURN ON WHEN THE RESET BUTTON IS PRESSED

- o Verify that the disk controller board has the proper voltages applied to it. If so, you should then check each disk drive and verify that they have the correct voltages applied to the proper location.

- o Verify that drive 0 is configured correctly. If it is, you may want to exchange drive 0 with drive 1 and eliminate the possibility of a bad disk drive.

- o Perform a continuity check on the disk drive cable supplied with your disk drive kit. The cable is made on a one to one basis, i.e., Pin one on one connector goes to pin one on the next connector.

- # Reference the troubleshooting flow chart at the end of this section for further troubleshooting hints.

DRIVE 0 LED AND MOTOR STAY ON CONTINUOUSLY

- o Verify again that each disk drive is properly configured.

- o Review and perform, if necessary, the steps outlined above for DRIVE 0 LED WILL NOT TURN ON.

- # Reference the troubleshooting flow charts at the end of this section for additional hints.

SYSTEM WILL NOT BOOT UP, OR LOAD A FILE

- o Verify first that the DOS you were supplied or are using is a good copy. A lot of problems can be caused by flaky software. BE SURE YOUR DOS IS GOOD!!!!

- o Try to push the read/write head on the disk drive towards the center of the drive. BE CAREFUL as you can damage the disk drive. The reason we suggest this step is due to the fact that the disk drive head can be jogged beyond the track 0 position during shipping. Therefore, when the disk controller issues the signal telling the drive to go to trace 0 and read the boot, the drive head will already be past trace 0 and will move forward to read the trace 0.

- # Reference the troubleshooting flow charts for further test and troubleshooting hints at the end of this section.

SYSTEM WILL NOT WRITE OR BACKUP TO A DISK DRIVE

- o Exchange drive 0 with drive 1 and retry the backup/ copy operation. If you succeed in performing a backup then the disk drive is probably at fault.

- o Make sure that you are using a good brand of diskettes.

- # Reference the troubleshooting flow charts at the end of this section for additional test/troubleshooting information

ATTEMPTS TO READ OR WRITE RESULT IN CRC, GAT OR HIT ERRORS

- o Exchange drive 1 with drive 0 or perform a single drive backup. If the problem disappears, then the disk drive may be the problem. Return for repair/ replacement.

- o If you have the proper tools, setup the VCO, WPW and RPW per the paragraph on adjusting Read and Write Pulse Width Control.

- # Reference the troubleshooting flow charts at the end of this section for additional test/troubleshooting hints.

If you are not successful in getting your Model III system to function with disk drives, the problem could be in either one of the subassemblies supplied with the disk drive kit or could be with your Model III C.P.U. board. The next best step is to return the drive kit for retest. If you suspect that your problem is with the Model III CPU itself, then your system will have to be returned to your Radio Shack service center for repair. We have experienced a considerable amount of problems with the Model III CPU's themself. Some typical problems are inconsistant boots, system gets lost during drive I/O, etc.

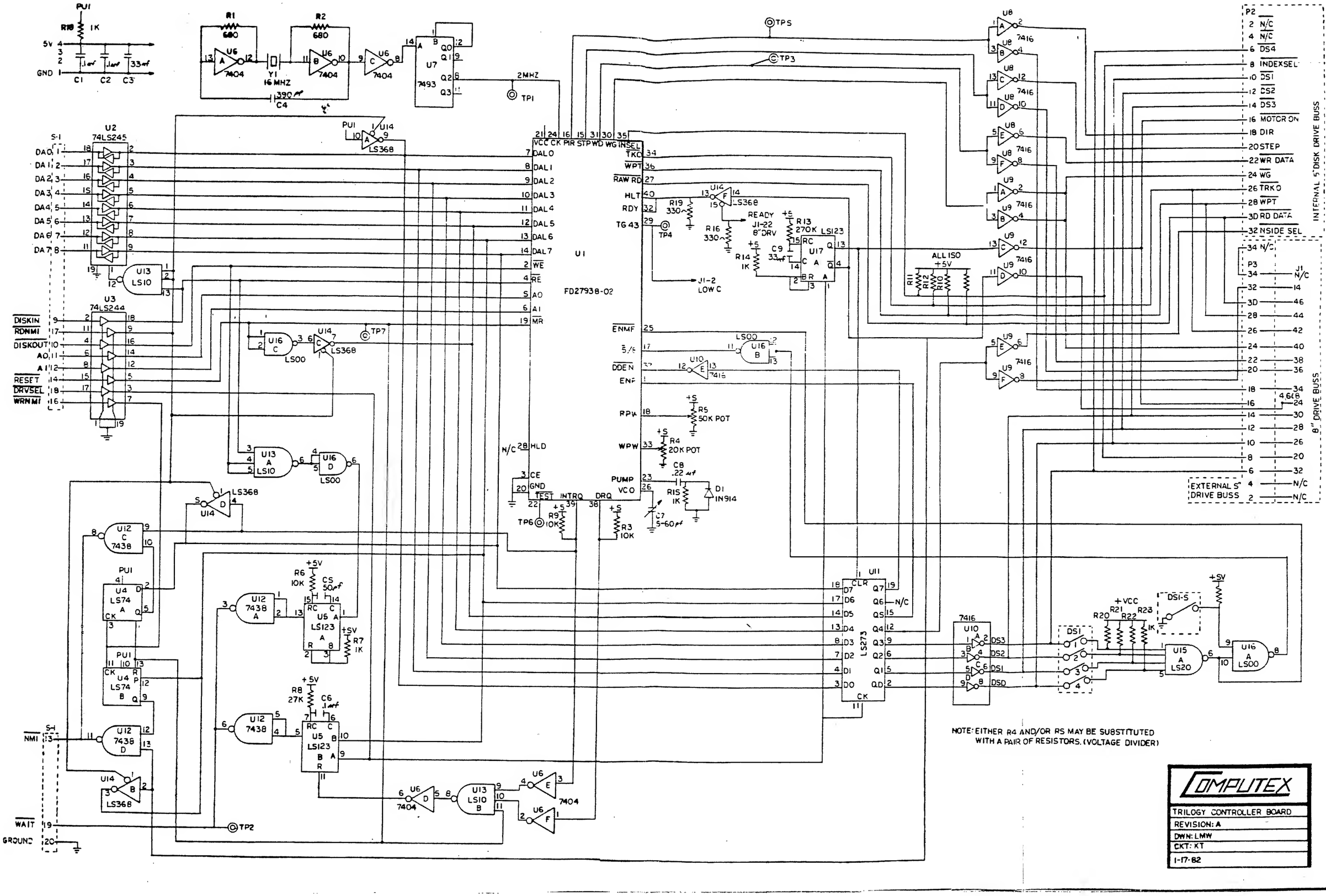

NOTE: EITHER R4 AND/OR R5 MAY BE SUBSTITUTED WITH A PAIR OF RESISTORS. (VOLTAGE DIVIDER)

COMPUTEX

TRILOGY CONTROLLER BOARD
REVISION: A
DWN: LMW
CKT: KT
1-17-82

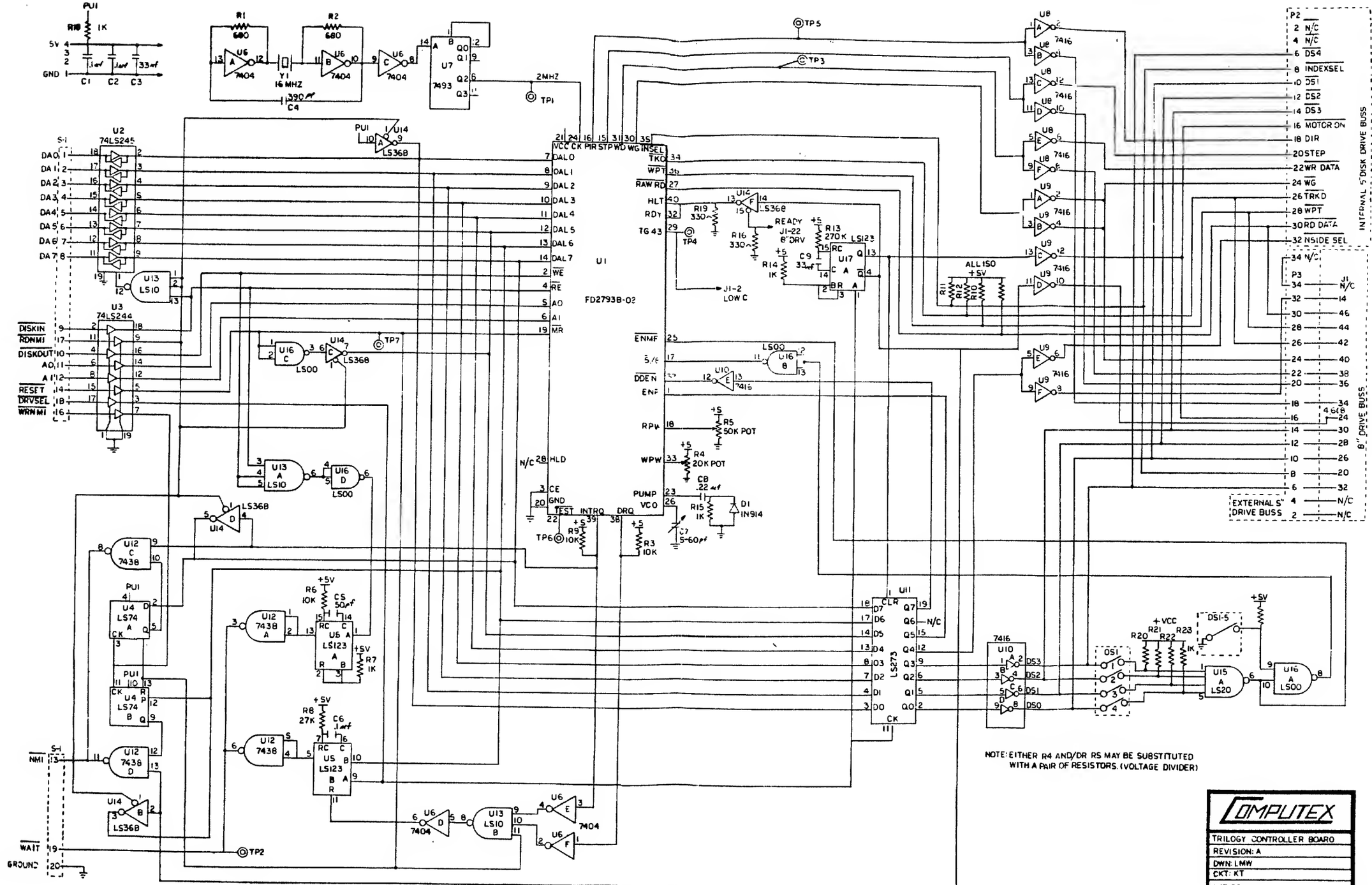

NOTE: EITHER R4 AND/OR R5 MAY BE SUBSTITUTED WITH A PAIR OF RESISTORS. (VOLTAGE DIVIDER)

COMPUTEX
TRILOGY CONTROLLER BOARD
REVISION: A
DWN: LMW
CKT: KT
1-17-82

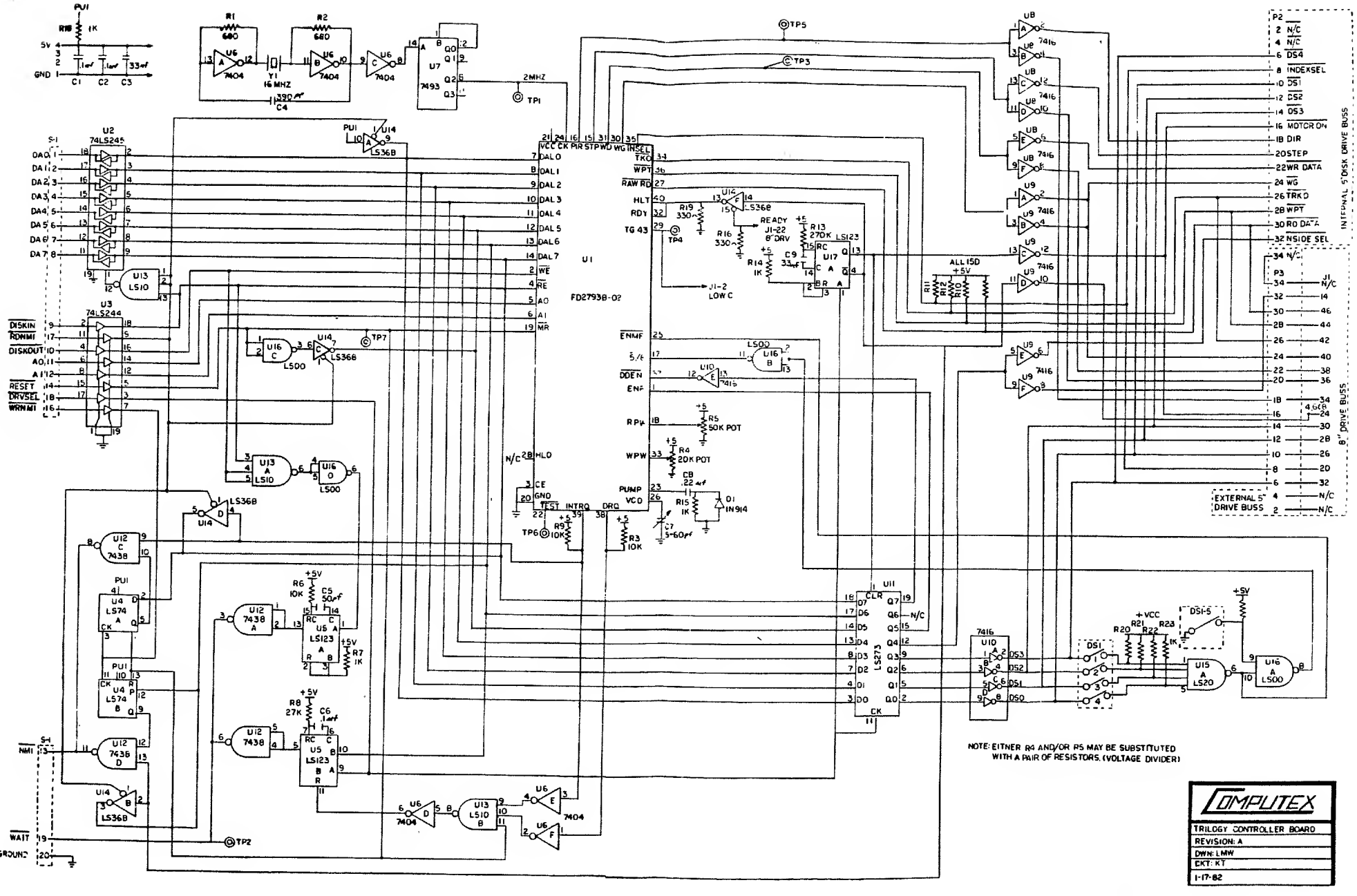

NOTE: EITNER R4 AND/OR R5 MAY BE SUBSTITUTED WITH A PAIR OF RESISTORS. (VOLTAGE DIVIDER)

COMPUTEX

TRILOGY CONTROLLER BOARD
REVISION: A
DWN: LMW
CKT: KT
1-17-82

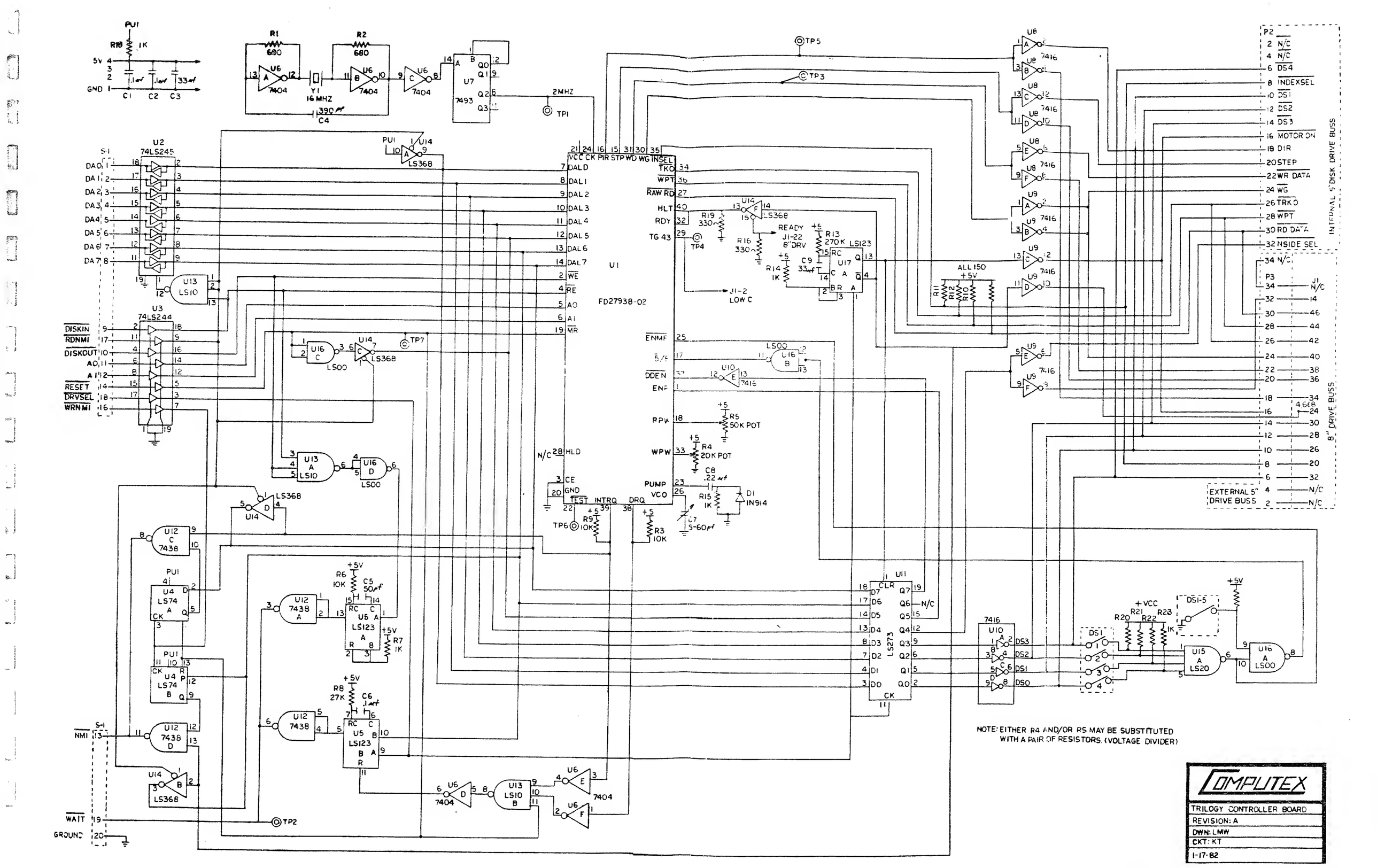

NOTE: EITHER R4 AND/OR R5 MAY BE SUBSTITUTED WITH A PAIR OF RESISTORS. (VOLTAGE DIVIDER)

COMPUTEX

TRILOGY CONTROLLER BOARD
REVISION: A
DWN: LMW
CKT: KT
1-17-82

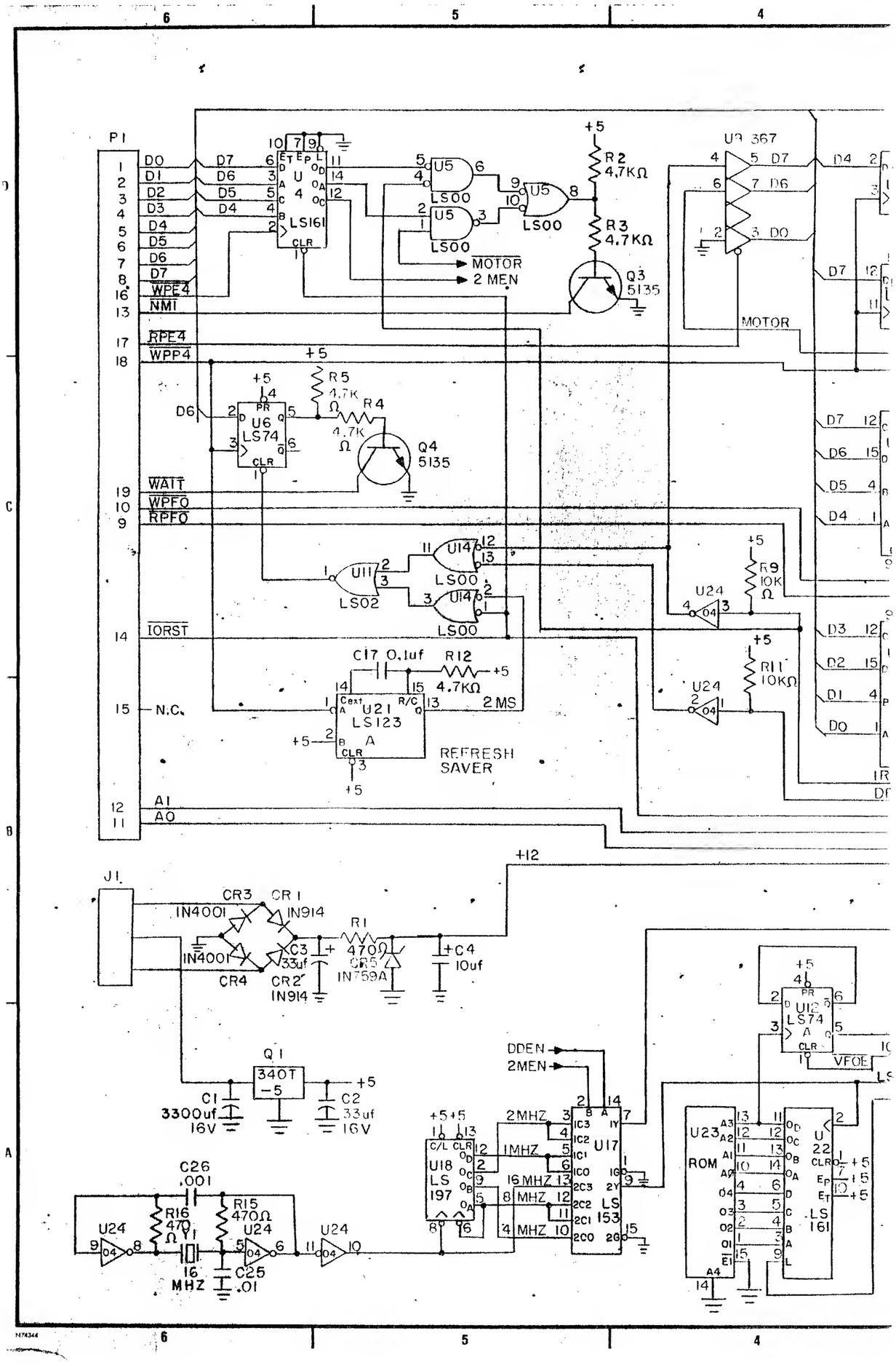

P1
D0
D1
D2
D3
D4
D5
D6
D7
WPE4
NMI
RPE4
WPP4
WAIT
WPFO
RPFO
IORST
N.C.
A1
A0
U4 LS161
U5 LS00
MOTOR
2 MEN
R2 4.7KΩ
R3 4.7KΩ
Q3 5135
U9 367
MOTOR
U6 LS74
R5 4.7K Ω
R4 4.7K Ω
Q4 5135
U11 LS02
U14 LS00
U24
R9 10K Ω
R11 10KΩ
C17 0.1uf
R12 4.7KΩ
U21 LS123
2 MS
REFRESH SAVER
J1
CR3 IN4001
CR1 IN914
CR4 IN4001
CR2 IN914
C3 33uf
R1 470Ω
CR5 IN759A
C4 10uf
+12
Q1 340T -5
C1 3300uf 16V
C2 33uf 16V
DDEN
2MEN
U18 LS 197
2MHZ
1MHZ
16MHZ
U17 LS 153
U12 LS74
VFOE
U23 ROM
U22 LS 161
C26 .001
R16 470 Ω
R15 470Ω
Y1 16 MHZ
C25 .01
U24

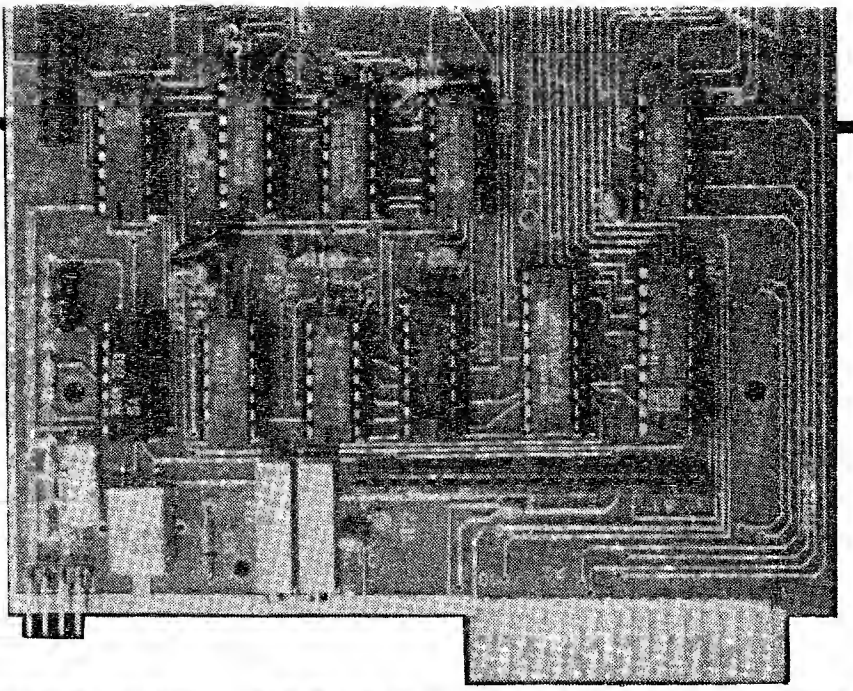

MODEL III DISK CONTROLLER

NO OTHER DRIVE CONTROLLER FOR THE TRS80 MODEL III COMPUTER PROVIDES THE FEATURES AND RELIABILITY THAT USERS REALLY NEED!

Using the latest and most advanced floppy disk controller chip on the market, World Wide Data Systems Inc., has developed the TRILOGY drive controller upgrade for your Model III computer. The TRILOGY has the capability to support almost any combinations of disk drives, single, double or 'QUAD' density,5", 8" or internal Winchester hard disk drives. Making it the most versatile drive controller available. The TRILOGY is also one of the few controllers that will handle even the most critical disk operating systems.

SUPPORTS 5", 8" AND WINCHESTER DRIVES, SIMULTANEOUSLY

Up to four floppy disk drives and four Winchester drives are supported by the TRILOGY controller. AN eight position dip switch is used to select which drives will be 5" single or double density, 5" quad density or 8" single or double density drives. A CPU speedup kit is required to use 8" drives in double density mode.

"STATE OF THE ART"
WESTERN DIGITAL WD2793 CONTROLLER

The WD2793 floppy controller chip represents the latest in technology from the leading manufacturer of MSI/LSI controllers. With features like ON CHIP PHASE LOCK LOOP DATA SEPERATION and AUTOMATIC WRITE PRECOMPENSATION, the WD2793 assures you of reliable operation and elimination of CRC errors and tracks locked out due to inferior data seperation techniques.

ONE YEAR WARRANTY

No other floppy drive controller board on the market is backed up with a limited one year warranty (parts and labor) by a company that has been in the business as long as WWDSI. As for quality, the TRILOGY features gold plated edge card connections, solder mask and silkscreened PCB, completely assembled, tested and burned in for greatest reliability. The TRILOGY also comes with superb documentation which details installation. theory, use and troubleshooting with pictures,charts and schematics.

The assembled and tested trilogy controller is avaiable in three different configurations:

5" Single, and Double Density.....$129.95
8" and Quad Density Option.....(add).....$20.00
Internal Winchester Option.....(add).....$30.00

• PRICES ARE SUBJECT TO CHANGE WITHOUT NOTICE
VISA, MASTERCARD and AMERICAN EXPRESS ARE ACCEPTED
NET 30 TERMS AVAILABLE

FOR COMPLETE UPGRADE KITS SEE REVERSE SIDE

TRS80 is a trademark of Radio Shack Corp.
DESIGN-A-KIT is a trademark of World Wide Data Systems Inc.

WWDSI.

WORLD WIDE DATA SYSTEMS Inc. 17321 El Camino Real Houston TX. 77058 (713) 488-8022

COMPLETE MODEL III INTERNAL DISK DRIVE KITS

DESIGN-A-KIT Another first from World Wide Data Systems Inc.

DESIGN-A-KIT is a totally new concept in MODEL III drive kits. With DESIGN-A-KIT you select only those components that you need to upgrade your MODEL III the way YOU want it. You pay DESIGN-A-KIT prices and save money.

To qualify for the DESIGN-A-KIT prices, you must purchase as a minimun, one of the TRILOGY controller boards and any one of the disk drives.

TRILOGY CONTROLLER

	REGULAR RETAIL	DESIGN-A-KIT PRICE
(A) TRILOGY 5" CONTROLLER	$129.95	$99.95
(B) TRILOGY 8" OPTION	$20.00	$15.00
(C) TRILOGY WINCHESTER OPTION	$30.00	$20.00
(D)WD1001 Winchester Controller	$349.95	$349.95

To upgrade with just 5" single or double density floppy disk drives use(A), if you want to use quad density or 8" drives add (B), if you want to add an internal Winchester, add (C) and (D).

INSTALLATION KITS

There are two different installation kits available for the TRILOGY controller. The floppy disk installation kit includes all cables, hardware, mounting brackets and an Astec switching power supply. The Winchester installation kit includes all of the above but substitutes a heavier switching power supply and includes two additional Winchester I/O cables.

	REGULAR RETAIL	DESIGN-A-KIT PRICE
FLOPPY DISK INSTALLATION KIT	$149.95	$99.95
WINCHESTER INSTALLATION KIT	$249.95	$229.95

The TRILOGY controller will support any of the following drives in a variety of combinations. Bear in mind that you will have to use the appropriate TRILOGY controller and installation kit to support the drives you select.

TANDON FLOPPY DISK DRIVES

		REGULAR RETAIL	DESIGN-A-KIT PRICE
	Single Sided 40 Track	$219.95	$199.95
	Double Sided 40 Track	$299.95	$279.95
	Single Sided 80 Track	$299.95	$289.95
	Double Sided 80 Track	$399.95	$349.95
	8" Single Sided	$499.95	$395.00
	8" Double Sided	$549.95	$495.00
PSC8	8" Power Supply & Case	$225.00	$195.00
PSC5	5" Power Supply & Case	$64.95	$59.95

AMPEX WINCHESTER DRIVES

		REGULAR RETAIL	DESIGN-A-KIT PRICE
PYXIS 7	5MByte Winchester	$799.95	$700.00
PYXIS 13	10MByte Winchester	$995.00	$900.00
PYXIS 20	15MByte Winchester	$1200.00	$1100.00
PYXIS 27	20MByte Winchester	$1400.00	$1300.00

DISK OPERATING SYSTEM

As a special bonus, we are featuring Micro Systems Software disk operating systems at a special discount with any DESGN-A-KIT purchase. DOS PLUS3.5 will handle 5", 8" drives, DOS PLUS 4.0 will handle 5",8" and Winchester disk drives.

	REGULAR RETAIL	DESIGN-A-KIT PRICE
DOS PLUS version 3.5	$129.95	$89.95
DOS PLUS version 4.0	$299.95	$199.95

To design your own Model III upgrade kit. simply decide on which components you need, jot down the component names, add up the DESIGN-A-KIT prices then call World Wide Data systems and place your order.

POPULAR DESIGN-A-KITS

SINGLE 5" MODEL III UPGRADE KIT

Trilogy 5" Controller	$99.95
Floppy Disk Installation Kit	$99.95
One TM100-1 Disk Drive	$199.95
TOTAL	$399.85

DUAL 5" UPGRADE with EXTERNAL 8" DRIVE

Trilogy 5" Controller	$99.95
8" Option Kit	$15.00
Floppy Disk INstallation Kit	$99.95
Two TM100-1 Disk Drives	$399.90
One 8" Double Sided Drive	$495.00
8" Drive Power Supply & Case	$195.00
TOTAL	$1304.80

SINGLE 5" UPGRADE with INTERNAL WINCHESTER DRIVE

Trilogy 5" Controller	$99.95
Winchester Option	$20.00
WD1001 Winchester Controller	$349.95
Winchester Installation Kit	$229.95
TM100-2 Double Sided 40 Track	$279.95
Ampex 7-5MByte Winchester	$700.00
DOS PLUS 4.0 Operating System	$199.95
TOTAL	$1879.75